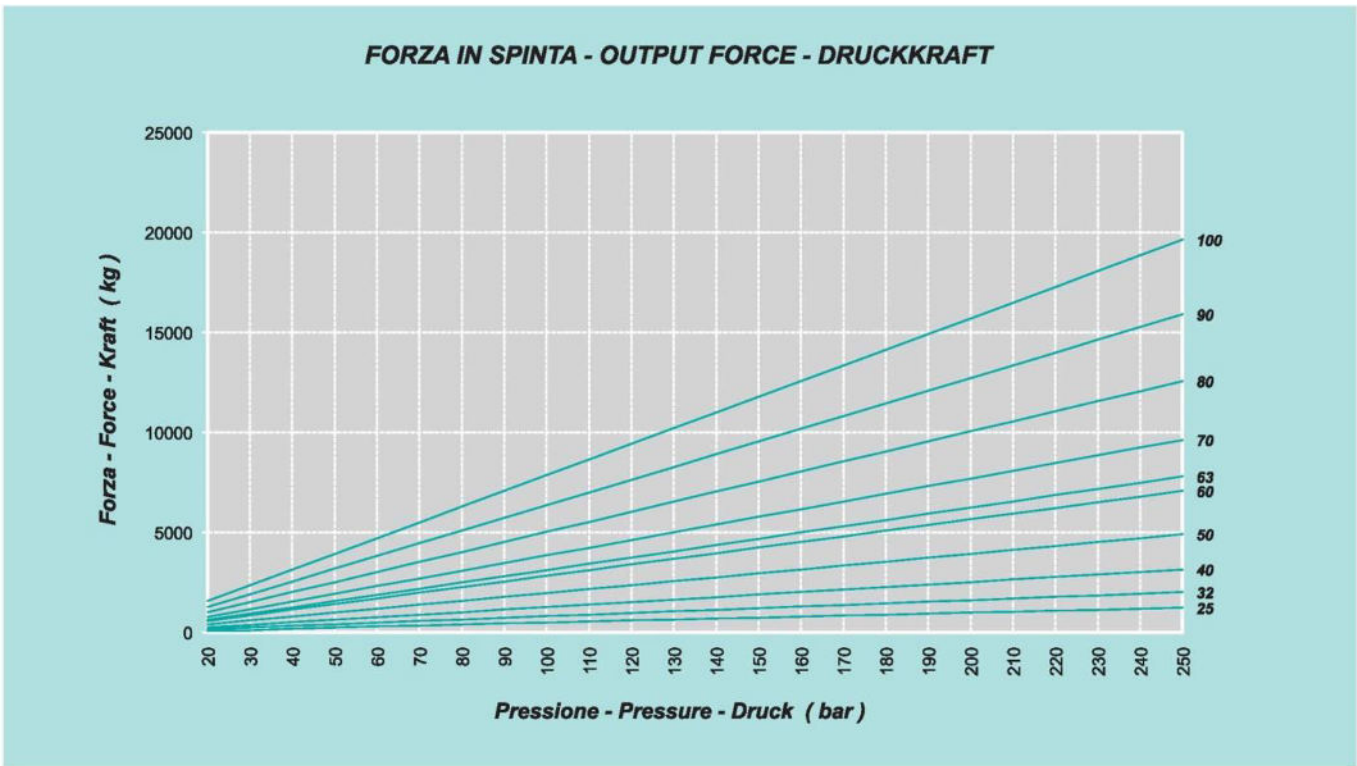
FORZA IN SPINTA - OUTPUT FORCE - DRUCKKRAFT
Forza - Force - Kraft (kg)
25000
20000
15000
10000
5000
0
20 30 40 50 60 70 80 90 100 110 120 130 140 150 160 170 180 190 200 210 220 230 240 250
Pressione - Pressure - Druck (bar)
100
90
80
70
63
60
50
40
32
25

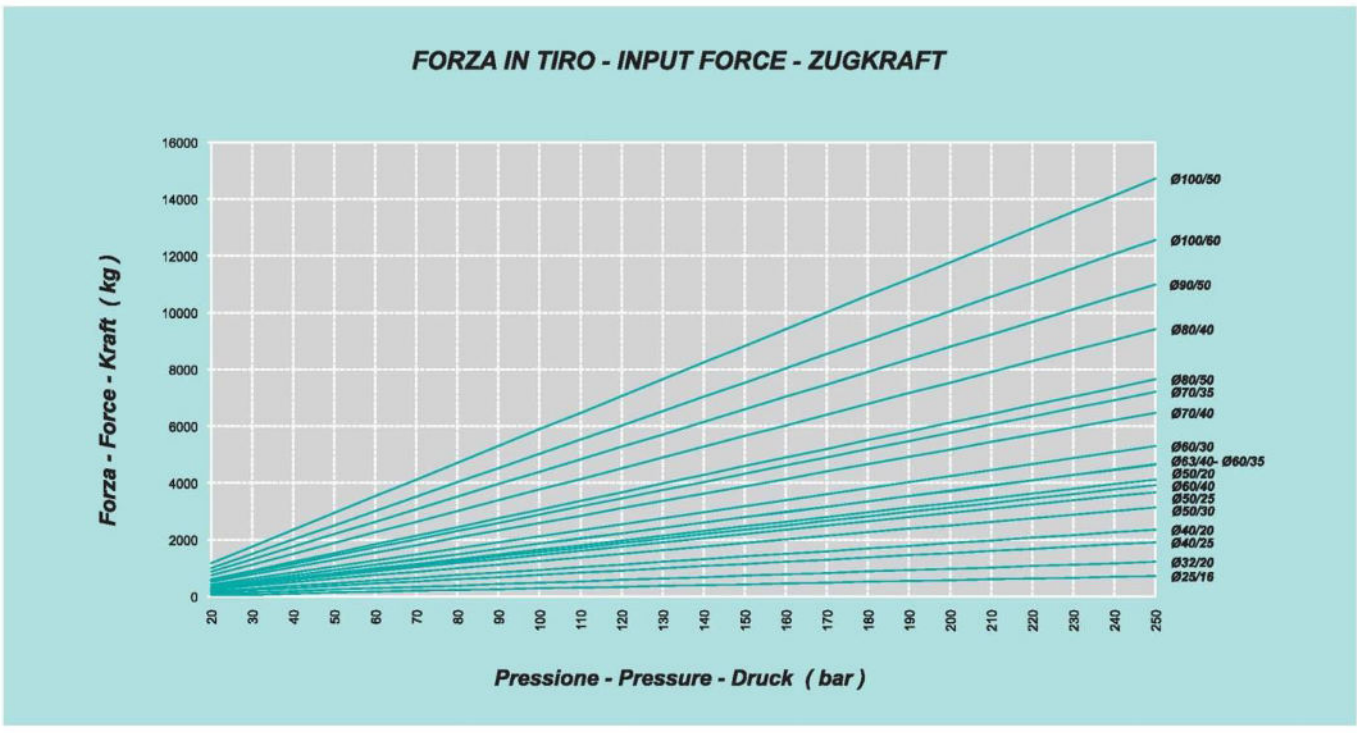
FORZA IN TIRO - INPUT FORCE - ZUGKRAFT
Forza - Force - Kraft (kg)
16000
14000
12000
10000
8000
6000
4000
2000
0
20 30 40 50 60 70 80 90 100 110 120 130 140 150 160 170 180 190 200 210 220 230 240 250
Pressione - Pressure - Druck (bar)
Ø100/50
Ø100/60
Ø90/50
Ø80/40
Ø80/50
Ø70/35
Ø70/40
Ø60/30
Ø63/40- Ø60/35
Ø50/20
Ø60/40
Ø50/25
Ø50/30
Ø40/20
Ø40/25
Ø32/20
Ø25/16

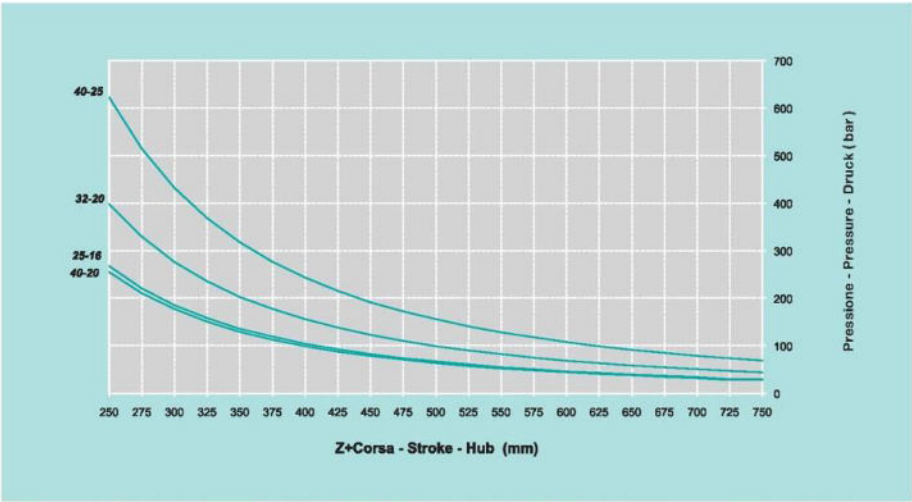

PRESSOFLESSIONE DEI CILINDRI
STANDARD TIPO HMO
(Alesaggio 25-32-40 mm)

COMBINED COMPRESSIVE AND
BENDING STRESS ON STANDARD
CYLINDERS HMO TYPE
(Bore 25-32-40 mm)

KNICKLAST DER
STANDARDZYLINDER TYP HMO
(Kolbendurchmesser 25-32-40 mm)

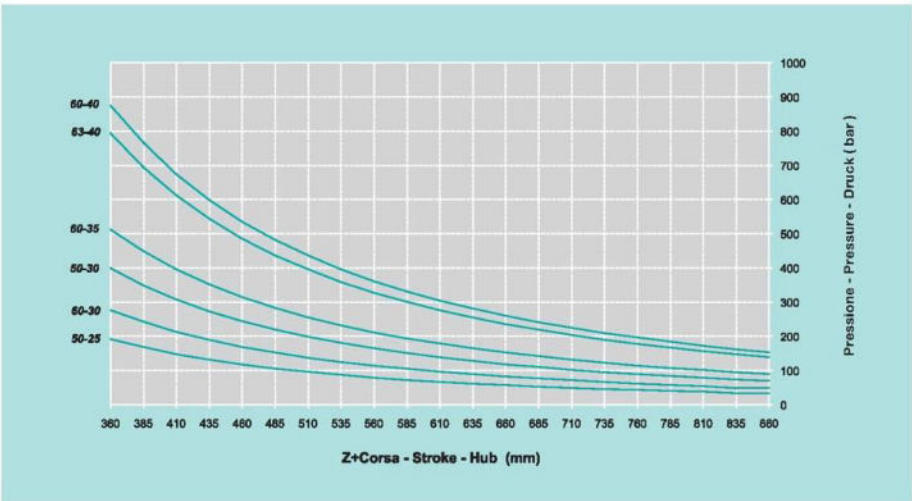

PRESSOFLESSIONE DEI CILINDRI
STANDARD TIPO HMO
(Alesaggio 50-60-63 mm)

COMBINED COMPRESSIVE AND
BENDING STRESS ON STANDARD
CYLINDERS HMO TYPE
(Bore 50-60-63 mm)

KNICKLAST DER
STANDARDZYLINDER TYP HMO
(Kolbendurchmesser 50-60-63 mm)

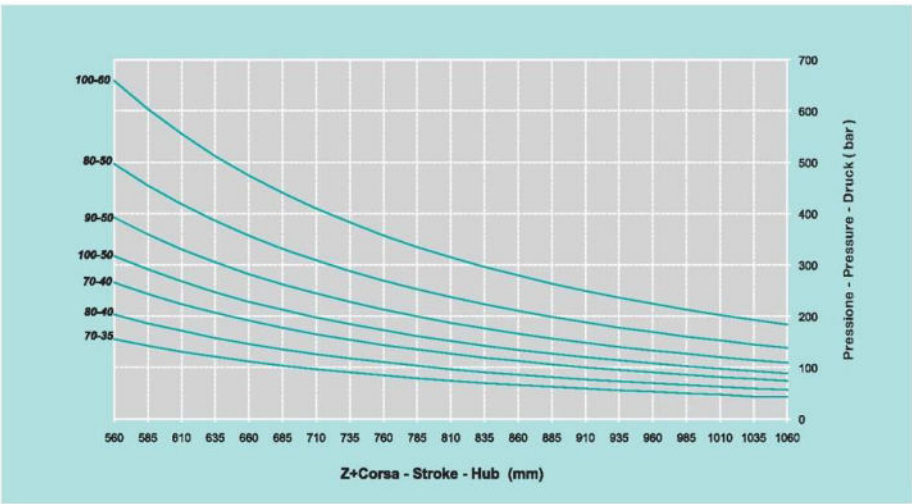

PRESSOFLESSIONE DEI CILINDRI
STANDARD TIPO HMO
(Alesaggio 70-80-90-100 mm)

COMBINED COMPRESSIVE AND
BENDING STRESS ON STANDARD
CYLINDERS HMO TYPE
(Bore 70-80-90-100 mm)

KNICKLAST DER
STANDARDZYLINDER TYP HMO
(Kolbendurchmesser 70-80-90-100 mm)

CARATTERISTICHE TECNICHE
TECHNICAL SPECIFICATIONS
TECHNISCHE ANGABEN

TYPE "HMO" - "HMOLM"

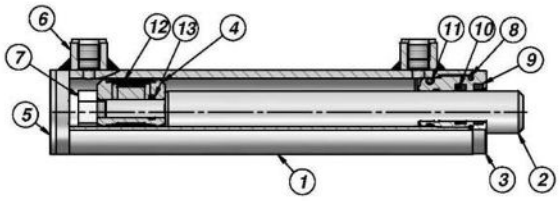

"HMO" Pressione Massima - Max. Pressure - Max. Druck: 210 Bar
"HMOLM" Pressione Massima - Max. Pressure - Max. Druck: 180 Bar

TYPE "HFR2S"

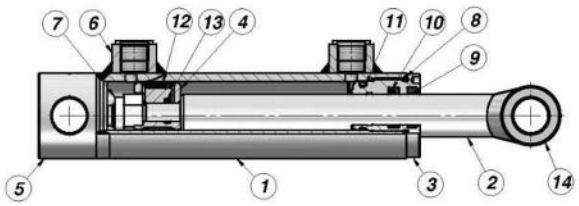

"HFR2S" Pressione Massima - Max. Pressure - Max. Druck: 210 Bar

TYPE "HMF"

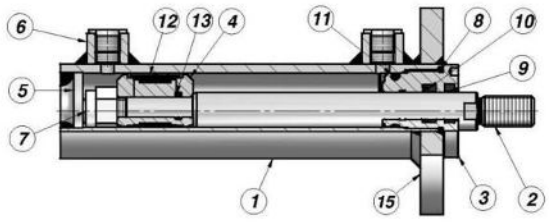

"HMF" Pressione Massima - Max. Pressure - Max. Druck: 210 Bar

1	TUBO LUCIDO POLISHED TUBE - POLIERTES ZYLINDERROHR	ACCIAIO - STEEL - STAHL: St 52.3 DIN 2393 ISO H9
2	STELO CROMATO CHROMED ROD - VERCHROMTE KOLBENSTANGE	ACCIAIO - STEEL - STAHL: UNI C45 - SAE 1045 CROMO - CHROME - CHROM: 25 Micron ±5 Rating 9/120 h ISO 10289 - 1999/ISO 9227-NSS
3	TESTATA DI GUIDA HEAD-BUSH - KOLBENSTANGENFÜHRUNG	GHISA - HYDRAULIC CAST IRON - HYDRAULIKGUSS: UNI 5007-G25
4	PISTONE - PISTON - KOLBEN	ACCIAIO - STEEL - STAHL: 9SMn28
5	FONDELLO - END-PLUG - ZYLINDERBODEN	ACCIAIO - STEEL - STAHL: S355J0 (Fe510C) - S355JR (A105)
6	BORCHIA FILETTATA THREADED PORT - ANSCHLUSSGEWINDE	ACCIAIO - STEEL - STAHL: 9SMn28
7	DADO AUTOBLOCCANTE LOCKNUT - SELBSTSPERRENDE MUTTER	ACCIAIO - STEEL - STAHL: UNI 7473 - 7474
8	GUARNIZIONE - SEAL - DICHTUNG O-RING	NBR 70 SHORE
9	GUARNIZIONE - SEAL - DICHTUNG "GHK"	POLIURETANO - POLYURETHANE - POLYURETHAN
10	GUARNIZIONE - SEAL - DICHTUNG "TSE-TTS-TTI/L"	"TSE": NBR+TESSUTO - NBR+FABRIC - NBR+GEWEBE "TTS-TTI/L": POLIURETANO - POLYURETHANE - POLYURETHAN
11	GUARNIZIONE - SEAL - DICHTUNG O-RING	NBR 70 SHORE
12	GUARNIZIONE - SEAL - DICHTUNG "TPM"	NBR+POM+POLIESTERE - NBR+POM+POLYESTER
13	GUARNIZIONE - SEAL - DICHTUNG O-RING	NBR 70 SHORE
14	BOCCOLA - BUSH - BUCHSE	ACCIAIO - STEEL - STAHL: S355J0 (Fe510C)
15	FLANGIA - FLANGE - FLANSCH	ACCIAIO - STEEL - STAHL: S355J0 (Fe510C)

Velocità Limite - Top Speed - Höchstgeschwindigkeit: max 0,5 m/s
Temperatura C° - Temperature C° - Temperaturbereich C°: -25°C - +80°C

CARATTERISTICHE TECNICHE
TECHNICAL SPECIFICATIONS
TECHNISCHE ANGABEN

TYPE "HTO"

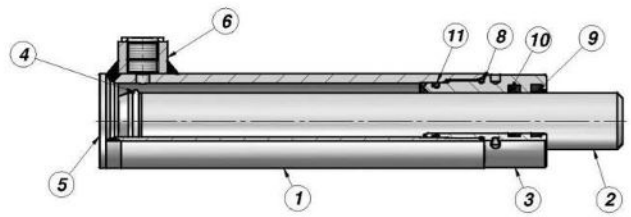

"HTO" Pressione Massima - Max. Pressure - Max. Druck: 210 Bar

TYPE "HFRT"

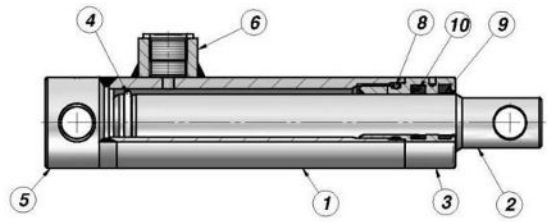

"HFRT" Pressione Massima - Max. Pressure - Max. Druck: 210 Bar

1	TUBO LUCIDO POLISHED TUBE - POLIERTES ZYLINDERROHR	ACCIAIO - STEEL - STAHL: St 52.3 DIN 2393 ISO H9
2	STELO CROMATO CHROMED ROD - VERCHROMTE KOLBENSTANGE	ACCIAIO - STEEL - STAHL: UNI C45 - SAE 1045 CROMO - CHROME - CHROM: 25 Micron ±5 Rating 9/120 h ISO 10289 - 1999/ISO 9227-NSS
3	TESTATA DI GUIDA HEAD-BUSH - KOLBENSTANGENFÜHRUNG TIPO - TYPE - TYP: "HTO"	GHISA - HYDRAULIC CAST IRON - HYDRAULIKGUSS: UNI 5007-G25
3	TESTATA DI GUIDA HEAD-BUSH - KOLBENSTANGENFÜHRUNG TIPO - TYPE - TYP: "HFRT"	ACCIAO 9SMn28 CON TRATTAMENTO "NI-TEMPER" STEEL 9SMn28 WITH "NI-TEMPER" TREATMENT STAHL 9SMn28 MIT "NI-TEMPER-BEHANDLUNG"
4	ANELLO DI ARRESTO - STOP RING - KLEMMRING	ACCIAIO - STEEL - STAHL
5	FONDELLO - END-PLUG - ZYLINDERBODEN	ACCIAIO - STEEL - STAHL: S355J0 (Fe510C) - S355JR (A105)
6	BORCHIA FILETTATA THREADED PORT - ANSCHLUSSGEWINDE	ACCIAIO - STEEL - STAHL: 9SMn28
8	GUARNIZIONE - SEAL - DICHTUNG TIPO - TYPE - TYP: "HTO" O-RING	NBR 70 SHORE
8	GUARNIZIONE - SEAL - DICHTUNG TIPO - TYPE - TYP: "HFRT" O-RING	NBR 90 SHORE
9	GUARNIZIONE - SEAL - DICHTUNG "GHK"	POLIURETANO - POLYURETHANE - POLYURETHAN
10	GUARNIZIONE - SEAL - DICHTUNG "TSE-TTS-TTI/L"	"TSE": NBR+TESSUTO - NBR+FABRIC - NBR+GEWEBE "TTS-TTI/L": POLIURETANO - POLYURETHANE - POLYURETHAN
11	GUARNIZIONE - SEAL - DICHTUNG O-RING	NBR 70 SHORE

Velocità Limite - Top Speed - Höchstgeschwindigkeit: max 0,5 m/s
Temperatura C° - Temperature C° - Temperaturbereich C°: -25°C - +80°C

HFR2S

CILINDRO DOPPIO EFFETTO
DOUBLE ACTING CYLINDER
DOPPELWIRKENDE ZYLINDER

M250

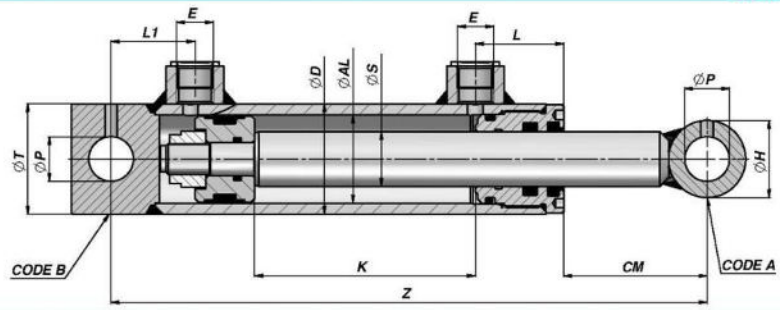

Codice Code Bestell-Nr.	K	Z	kg	E BSP	L	L1	CM	ØP	ØH	V	ØT	Code A	Code B	Codice Code Bestell-Nr.	K	Z	kg
ØD 35 ØAL 25 ØS 16																	
HFR0160050	**50**	160	1,00														
HFR0160100	**100**	210	1,20														
HFR0160150	**150**	260	1,40	1/4"	33	22	31	12,1	25	25	35	CBF0012025025	CFHR035025				
HFR0160200	**200**	310	1,70														
ØD 42 ØAL 32 ØS 20																	
HFR0200050	**50**	205	1,70														
HFR0200100	**100**	255	2,10														
HFR0200150	**150**	305	2,40														
HFR0200200	**200**	355	2,80														
HFR0200250	**250**	405	3,10	1/4"	33	35	51	16,2	30	35	40	CBF0016030035	CFHR040032				
HFR0200300	**300**	455	3,50														
HFR0200400	**400**	555	4,20														
HFR0200500	**500**	655	4,80														
ØD 50 ØAL 40 ØS 25																	
HFR2S0400250100	**100**	270	3,00														
HFR2S0400250150	**150**	320	3,40														
HFR2S0400250200	**200**	370	3,90														
HFR2S0400250250	**250**	420	4,40														
HFR2S0400250300	**300**	470	4,80														
HFR2S0400250400	**400**	570	5,80	3/8"	40	38	65	20,25	35	40	50	CBF1020035040	CFHR040020040				
HFR2S0400250500	**500**	670	6,70														
HFR2S0400250600	**600**	770	7,60														
HFR2S0400250700	**700**	870	8,60														
HFR2S0400250800	**800**	970	9,50														
ØD 60 ØAL 50 ØS 30																	
HFR2S0500300100	**100**	300	4,40														
HFR2S0500300150	**150**	350	5,00														
HFR2S0500300200	**200**	400	5,60														
HFR2S0500300250	**250**	450	6,20														
HFR2S0500300300	**300**	500	6,90														
HFR2S0500300400	**400**	600	8,10														
HFR2S0500300500	**500**	700	9,30	3/8"	43	42	85	25,25	40	45	60	CBF1025040045	CFHR050025049				
HFR2S0500300600	**600**	800	10,50														
HFR2S0500300700	**700**	900	11,80														
HFR2S0500300800	**800**	1000	13,00														
HFR2S0500300900	**900**	1100	14,20														
HFR2S0500301000	**1000**	1200	15,50														

HFR2S

CILINDRO DOPPIO EFFETTO
DOUBLE ACTING CYLINDER
DOPPELWIRKENDE ZYLINDER

M250

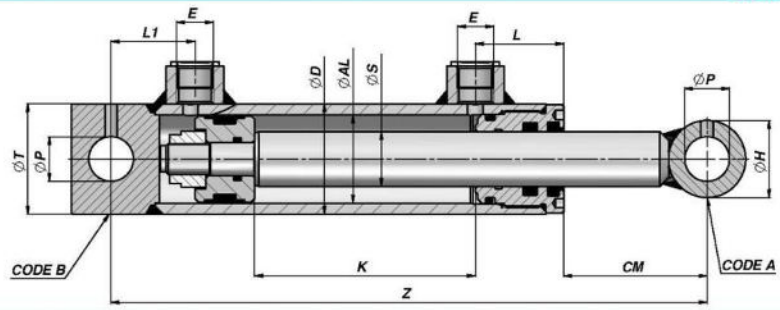

Codice Code Bestell-Nr.	K	Z	kg	E BSP	L	L1	CM	ØP	ØH	V	ØT	Code A	Code B	Codice Code Bestell-Nr.	K	Z	kg
ØD 35 ØAL 25 ØS 16																	
HFR0160050	**50**	160	1,00														
HFR0160100	**100**	210	1,20														
HFR0160150	**150**	260	1,40	1/4"	33	22	31	12,1	25	25	35	CBF0012025025	CFHR035025				
HFR0160200	**200**	310	1,70														
ØD 42 ØAL 32 ØS 20																	
HFR0200050	**50**	205	1,70														
HFR0200100	**100**	255	2,10														
HFR0200150	**150**	305	2,40														
HFR0200200	**200**	355	2,80														
HFR0200250	**250**	405	3,10	1/4"	33	35	51	16,2	30	35	40	CBF0016030035	CFHR040032				
HFR0200300	**300**	455	3,50														
HFR0200400	**400**	555	4,20														
HFR0200500	**500**	655	4,80														
ØD 50 ØAL 40 ØS 25																	
HFR2S0400250100	**100**	270	3,00														
HFR2S0400250150	**150**	320	3,40														
HFR2S0400250200	**200**	370	3,90														
HFR2S0400250250	**250**	420	4,40														
HFR2S0400250300	**300**	470	4,80														
HFR2S0400250400	**400**	570	5,80	3/8"	40	38	65	20,25	35	40	50	CBF1020035040	CFHR040020040				
HFR2S0400250500	**500**	670	6,70														
HFR2S0400250600	**600**	770	7,60														
HFR2S0400250700	**700**	870	8,60														
HFR2S0400250800	**800**	970	9,50														
ØD 60 ØAL 50 ØS 30																	
HFR2S0500300100	**100**	300	4,40														
HFR2S0500300150	**150**	350	5,00														
HFR2S0500300200	**200**	400	5,60														
HFR2S0500300250	**250**	450	6,20														
HFR2S0500300300	**300**	500	6,90														
HFR2S0500300400	**400**	600	8,10														
HFR2S0500300500	**500**	700	9,30	3/8"	43	42	85	25,25	40	45	60	CBF1025040045	CFHR050025049				
HFR2S0500300600	**600**	800	10,50														
HFR2S0500300700	**700**	900	11,80														
HFR2S0500300800	**800**	1000	13,00														
HFR2S0500300900	**900**	1100	14,20														
HFR2S0500301000	**1000**	1200	15,50														

CILINDRO DOPPIO EFFETTO
DOUBLE ACTING CYLINDER
DOPPELWIRKENDE ZYLINDER

HFR2S

M250

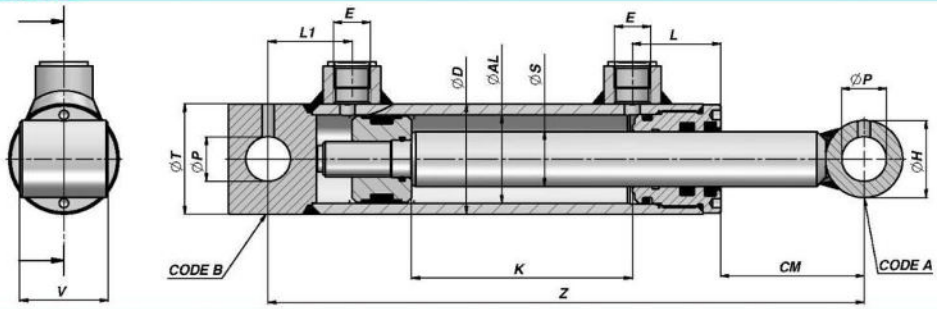

Codice Code Bestell-Nr.	K	Z	kg	E BSP	L	L1	CM	ØP	ØH	V	ØT	Code A	Code B
ØD 70 ØAL 60 ØS 30													
HFR2S0600300100	**100**	300	5,60										
HFR2S0600300150	**150**	350	6,30										
HFR2S0600300200	**200**	400	7,00										
HFR2S0600300250	**250**	450	7,70										
HFR2S0600300300	**300**	500	8,30										
HFR2S0600300350	**350**	550	9,00										
HFR2S0600300400	**400**	600	9,70	3/8"	50	36	83	25,25	40	45	70	CBF1025040045	CFHR060025047
HFR2S0600300450	**450**	650	10,40										
HFR2S0600300500	**500**	700	11,00										
HFR2S0600300600	**600**	800	12,40										
HFR2S0600300700	**700**	900	13,70										
ØD 80 ØAL 70 ØS 40													
HFR2S0700400200	**200**	410	10,10										
HFR2S0700400250	**250**	460	11,00										
HFR2S0700400300	**300**	510	12,00										
HFR2S0700400350	**350**	560	13,00										
HFR2S0700400400	**400**	610	13,90										
HFR2S0700400450	**450**	660	14,90	3/8"	50	46	82	30,25	50	55	80	CBF1030050055	CFHR070030063
HFR2S0700400500	**500**	710	15,80										
HFR2S0700400600	**600**	810	17,70										
HFR2S0700400700	**700**	910	19,60										
HFR2S0700400800	**800**	1010	21,50										
HFR2S0700400900	**900**	1110	23,40										
ØD 92 ØAL 80 ØS 40													
HFR2S0800400200	**200**	410	13,00										
HFR2S0800400250	**250**	460	14,20										
HFR2S0800400300	**300**	510	15,30										
HFR2S0800400350	**350**	560	16,40										
HFR2S0800400400	**400**	610	17,50										
HFR2S0800400500	**500**	710	19,80	3/8"	60	42	70	30,25	50	55	90	CBF1030050055	CFHR080030060
HFR2S0800400600	**600**	810	22,00										
HFR2S0800400700	**700**	910	24,30										
HFR2S0800400800	**800**	1010	26,50										
HFR2S0800400900	**900**	1110	28,80										
HFR2S0800401000	**1000**	1210	31,00										
ØD 115 ØAL 100 ØS 50													
HFR2S1000500200	**200**	425	21,50										
HFR2S1000500300	**300**	525	25,00										
HFR2S1000500400	**400**	625	28,50										
HFR2S1000500500	**500**	725	32,00	1/2"	66	45	75	30,25	60	70	115	CBF1030060070	CFHR100030063
HFR2S1000500700	**700**	925	39,10										
HFR2S1000500900	**900**	1125	46,10										
HFR2S1000501000	**1000**	1225	49,60										

Codice Code Bestell-Nr.	K	Z	kg
ØD 70 ØAL 60 ØS 35			
HFR2S0600350200	**200**	400	7,50
HFR2S0600350300	**300**	500	9,00
HFR2S0600350400	**400**	600	10,60
HFR2S0600350500	**500**	700	12,10
HFR2S0600350600	**600**	800	13,70
HFR2S0600350700	**700**	900	15,20
HFR2S0600350800	**800**	1000	16,80
HFR2S0600350900	**900**	1100	18,30
HFR2S0600351000	**1000**	1200	19,90

MATERIALE - MATERIAL:
TUBO - TUBE - ROHR: ACCIAIO - STEEL - STAHL St 52.3 DIN 2393 ISO H9
STELO - ROD - KOLBENSTANGE:
ACCIAIO - STEEL - STAHL UNI C45 SAE 1045 - CROMO - CHROME - CHROM: 25 MICRON ±5 Rating 9/120 h ISO 10289 - 1999/ISO 9227-NSS

HMOLM

CILINDRO DOPPIO EFFETTO
DOUBLE ACTING CYLINDER
DOPPELWIRKENDE ZYLINDER

C200

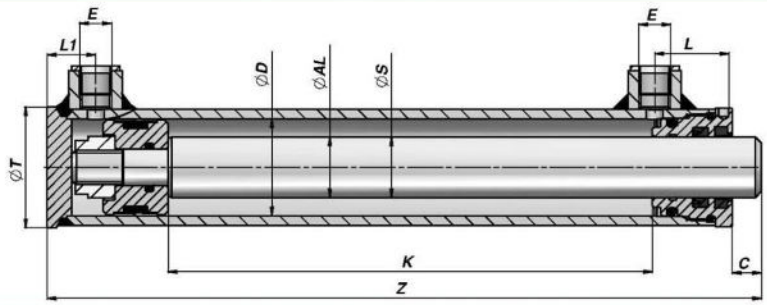

Codice Code Bestell-Nr.	K	Z	kg	E BSP	L	L1	C	ØT	Codice Code Bestell-Nr.	K	Z	kg
ØD 48 ØAL 40 ØS 20									**ØD 48 ØAL 40 ØS 25**			
HMOLM0400200100	**100**	195	1,73						HMOLM0400250100	**100**	195	1,88
HMOLM0400200150	**150**	245	2,07						HMOLM0400250150	**150**	245	2,30
HMOLM0400200200	**200**	295	2,41						HMOLM0400250200	**200**	295	2,72
HMOLM0400200250	**250**	345	2,75						HMOLM0400250250	**250**	345	3,14
HMOLM0400200300	**300**	395	3,09	1/4"	32	20	12	50	HMOLM0400250300	**300**	395	3,56
HMOLM0400200350	**350**	445	3,43						HMOLM0400250350	**350**	445	3,98
HMOLM0400200400	**400**	495	3,77						HMOLM0400250400	**400**	495	4,40
HMOLM0400200450	**450**	545	4,11						HMOLM0400250450	**450**	545	4,82
HMOLM0400200500	**500**	595	4,45						HMOLM0400250500	**500**	595	5,24
ØD 58 ØAL 50 ØS 25									**ØD 58 ØAL 50 ØS 30**			
HMOLM0500250100	**100**	205	2,58						HMOLM0500300100	**100**	205	2,76
HMOLM0500250150	**150**	255	3,04						HMOLM0500300150	**150**	255	3,31
HMOLM0500250200	**200**	305	3,50						HMOLM0500300200	**200**	305	3,86
HMOLM0500250250	**250**	355	3,96						HMOLM0500300250	**250**	355	4,41
HMOLM0500250300	**300**	405	4,42	3/8"	36	22	13	60	HMOLM0500300300	**300**	405	4,96
HMOLM0500250350	**350**	455	4,88						HMOLM0500300350	**350**	455	5,51
HMOLM0500250400	**400**	505	5,34						HMOLM0500300400	**400**	505	6,06
HMOLM0500250450	**450**	555	5,80						HMOLM0500300450	**450**	555	6,61
HMOLM0500250500	**500**	605	6,26						HMOLM0500300500	**500**	605	7,16
ØD 68 ØAL 60 ØS 30									**ØD 68 ØAL 60 ØS 35**			
HMOLM0600300100	**100**	220	3,76						HMOLM0600350100	**100**	220	3,97
HMOLM0600300150	**150**	270	4,35						HMOLM0600350150	**150**	270	4,66
HMOLM0600300200	**200**	320	4,94						HMOLM0600350200	**200**	320	5,35
HMOLM0600300250	**250**	370	5,53						HMOLM0600350250	**250**	370	6,04
HMOLM0600300300	**300**	420	6,12	3/8"	39	25	13	70	HMOLM0600350300	**300**	420	6,73
HMOLM0600300350	**350**	470	6,71						HMOLM0600350350	**350**	470	7,42
HMOLM0600300400	**400**	520	7,30						HMOLM0600350400	**400**	520	8,11
HMOLM0600300450	**450**	570	7,89						HMOLM0600350450	**450**	570	8,80
HMOLM0600300500	**500**	620	8,48						HMOLM0600350500	**500**	620	9,49
ØD 78 ØAL 70 ØS 35									**ØD 78 ØAL 70 ØS 40**			
HMOLM0700350100	**100**	220	4,81									
HMOLM0700350150	**150**	270	5,55									
HMOLM0700350200	**200**	320	6,29						HMOLM0700400200	**200**	320	6,82
HMOLM0700350250	**250**	370	7,03	3/8"	39	25	13	80	HMOLM0700400250	**250**	370	7,68
HMOLM0700350300	**300**	420	7,77						HMOLM0700400300	**300**	420	8,54
HMOLM0700350350	**350**	470	8,51						HMOLM0700400350	**350**	470	9,40
HMOLM0700350400	**400**	520	9,25						HMOLM0700400400	**400**	520	10,26
HMOLM0700350500	**500**	620	10,74						HMOLM0700400500	**500**	620	11,98

MATERIALE - MATERIAL:
TUBO - TUBE - ROHR: ACCIAIO - STEEL - STAHL St 52.3 DIN 2393 ISO H9
STELO - ROD - KOLBENSTANGE:
ACCIAIO - STEEL - STAHL UNI C45 SAE 1045 - CROMO - CHROME - CHROM: 25 MICRON ±5 Rating 9/120 h ISO 10289 - 1999/ISO 9227-NSS

HM1

CILINDRO DOPPIO EFFETTO
DOUBLE ACTING CYLINDER
DOPPELWIRKENDE ZYLINDER

M250

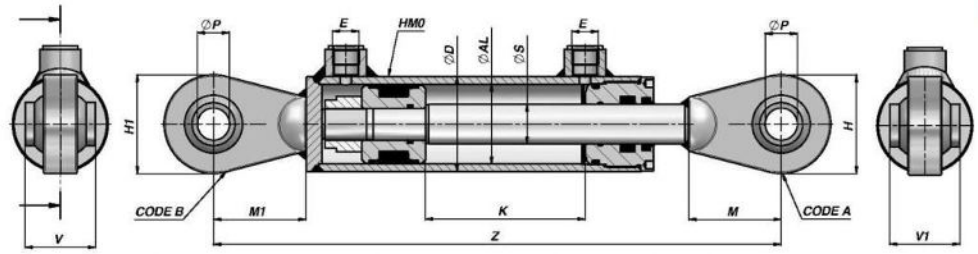

Codice Code Bestell-Nr.	K	Z	kg	E BSP	ØP	H	V	M	H1	V1	M1	Code A	Code B	Codice Code Bestell-Nr.	K	Z	kg
ØD 42 ØAL 32 ØS 20																	
HM1032200050	**50**	275	1,88														
HM1032200100	**100**	325	2,18														
HM1032200150	**150**	375	2,53														
HM1032200200	**200**	425	2,88	1/4"	16,2	46	20	60	46	20	60	CSR0010495	CSR0010495				
HM1032200250	**250**	475	3,28														
HM1032200300	**300**	525	3,58														
HM1032200400	**400**	625	4,28														
HM1032200500	**500**	725	4,98														
ØD 50 ØAL 40 ØS 20														**ØD 50 ØAL 40 ØS 25**			
HM11200100	**100**	350	2,85											HM11250100	**100**	350	3,08
HM11200150	**150**	400	3,25											HM11250150	**150**	400	3,53
HM11200200	**200**	450	3,63											HM11250200	**200**	450	3,97
HM11200250	**250**	500	4,03											HM11250250	**250**	500	4,43
HM11200300	**300**	550	4,43											HM11250300	**300**	550	4,90
HM11200350	**350**	600	4,85	1/4"	16,2	46	20	60	46	20	60	CSR0010495	CSR0010495	HM11250350	**350**	600	5,37
HM11200400	**400**	650	5,23											HM11250400	**400**	650	5,84
HM11200450	**450**	700	5,66											HM11250450	**450**	700	6,30
HM11200500	**500**	750	6,07											HM11250500	**500**	750	6,78
														HM11250550	**550**	800	7,18
														HM11250600	**600**	850	7,71
ØD 60 ØAL 50 ØS 25														**ØD 60 ØAL 50 ØS 30**			
HM12250100	**100**	356	4,56														
HM12250150	**150**	406	5,10											HM12300150	**150**	406	5,38
HM12250200	**200**	456	5,61											HM12300200	**200**	456	6,01
HM12250250	**250**	506	6,12											HM12300250	**250**	506	6,62
HM12250300	**300**	556	6,62											HM12300300	**300**	556	7,24
HM12250350	**350**	606	7,21											HM12300350	**350**	606	7,82
HM12250400	**400**	656	7,67	3/8"	20,2	62	44	58	62	44	58	CSR0010720	CSR0010720	HM12300400	**400**	656	8,47
HM12250450	**450**	706	8,57											HM12300450	**450**	706	9,07
HM12250500	**500**	756	8,70											HM12300500	**500**	756	9,69
HM12250550	**550**	806	9,33											HM12300550	**550**	806	10,31
HM12250600	**600**	856	9,73											HM12300600	**600**	856	10,91
														HM12300700	**700**	956	12,12
HM12250800	**800**	1056	11,98											HM12300800	**800**	1056	13,37
HM12251000	**1000**	1256	14,14											HM12301000	**1000**	1256	15,84
ØD 70 ØAL 60 ØS 30														**ØD 70 ØAL 60 ØS 35**			
HM13300100	**100**	390	6,75											HM13350100	**100**	390	7,00
HM13300150	**150**	440	7,48											HM13350150	**150**	440	7,78
HM13300200	**200**	490	8,13											HM13350200	**200**	490	8,53
HM13300250	**250**	540	8,80											HM13350250	**250**	540	9,33
HM13300300	**300**	590	9,48											HM13350300	**300**	590	10,08
HM13300350	**350**	640	10,13											HM13350350	**350**	640	10,87
HM13300400	**400**	690	10,83	3/8"	25,4	75	51	65	75	51	65	CSR0010740	CSR0010740	HM13350400	**400**	690	11,65
HM13300450	**450**	740	11,46											HM13350450	**450**	740	12,40
HM13300500	**500**	790	12,18											HM13350500	**500**	790	13,18
HM13300550	**550**	840	12,79											HM13350550	**550**	840	13,93
HM13300600	**600**	890	13,53											HM13350600	**600**	890	14,74
HM13300800	**800**	1090	16,19											HM13350800	**800**	1090	17,80
HM13301000	**1000**	1290	18,93											HM13351000	**1000**	1290	20,86

CILINDRO DOPPIO EFFETTO
DOUBLE ACTING CYLINDER
DOPPELWIRKENDE ZYLINDER

HM1

M250

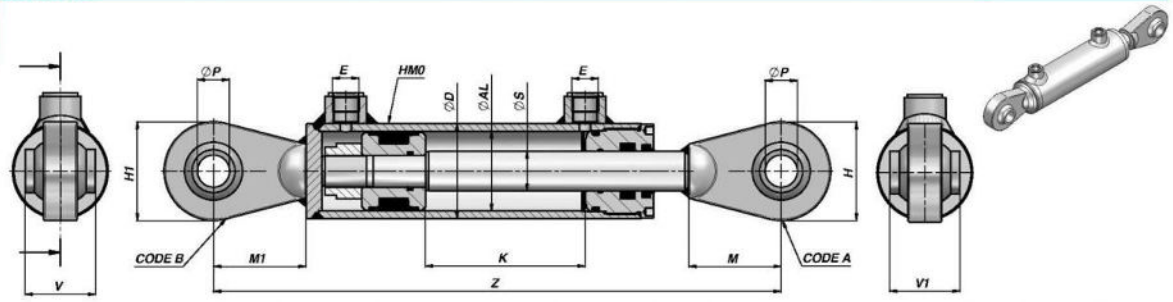

Codice Code Bestell-Nr.	K	Z	kg	E BSP	ØP	H	V	M	H1	V1	M1	Code A	Code B	Codice Code Bestell-Nr.	K	Z	kg
ØD 70 ØAL 60 ØS 40														**ØD 73 ØAL 63 ØS 40**			
HM13400200	**200**	490	9,18											HM1063400200	**200**	490	9,54
HM13400250	**250**	540	10,07											HM1063400250	**250**	540	10,44
HM13400300	**300**	590	10,96											HM1063400300	**300**	590	11,34
HM13400350	**350**	640	11,83											HM1063400350	**350**	640	12,24
HM13400400	**400**	690	12,72											HM1063400400	**400**	690	13,14
HM13400450	**450**	740	13,57	3/8"	25,4	75	51	65	75	51	65	CSR0010740	CSR0010740	HM1063400450	**450**	740	14,04
HM13400500	**500**	790	14,45											HM1063400500	**500**	790	14,94
HM13400550	**550**	840	15,38											HM1063400550	**550**	840	15,84
HM13400600	**600**	890	16,23											HM1063400600	**600**	890	16,74
HM13400800	**800**	1090	19,75											HM1063400800	**800**	1090	20,44
HM13401000	**1000**	1290	23,33											HM1063401000	**1000**	1290	24,04
ØD 80 ØAL 70 ØS 35														**ØD 80 ØAL 70 ØS 40**			
HM14350100	**100**	390	8,03														
HM14350150	**150**	440	8,89														
HM14350200	**200**	490	9,68											HM14400200	**200**	490	10,22
HM14350250	**250**	540	10,54											HM14400250	**250**	540	11,20
HM14350300	**300**	590	11,34											HM14400300	**300**	590	12,18
HM14350350	**350**	640	12,20											HM14400350	**350**	640	13,14
HM14350400	**400**	690	12,94	3/8"	25,4	75	51	65	75	51	65	CSR0010740	CSR0010740	HM14400400	**400**	690	14,74
HM14350450	**450**	740	13,82											HM14400450	**450**	740	15,05
HM14350500	**500**	790	14,54											HM14400500	**500**	790	15,95
HM14350550	**550**	840	15,60											HM14400550	**550**	840	17,04
HM14350600	**600**	890	16,14											HM14400600	**600**	890	17,93
HM14350800	**800**	1090	19,50											HM14400800	**800**	1090	21,67
HM14351000	**1000**	1290	23,20											HM14401000	**1000**	1290	25,45
ØD 92 ØAL 80 ØS 40														**ØD 92 ØAL 80 ØS 50**			
HM15400200	**200**	510	13,87											HM15500200	**200**	510	15,14
HM15400250	**250**	560	15,01											HM15500250	**250**	560	16,52
HM15400300	**300**	610	16,14											HM15500300	**300**	610	17,94
HM15400400	**400**	710	18,35	1/2"	30,2	83	55	65	83	55	65	CSR0010810	CSR0010810	HM15500400	**400**	710	20,74
HM15400500	**500**	810	20,56											HM15500500	**500**	810	23,50
HM15400600	**600**	910	22,77											HM15500600	**600**	910	26,79
HM15400800	**800**	1110	27,29											HM15500800	**800**	1110	32,29
HM15401000	**1000**	1310	31,71											HM15501000	**1000**	1310	37,79
ØD 105 ØAL 90 ØS 50																	
HM1090500300	**300**	656	26,22														
HM1090500400	**400**	756	29,56														
HM1090500500	**500**	856	32,89	1/2"	40,2	108	75	85	108	75	85	CSR0010820	CSR0010820				
HM1090500600	**600**	956	36,22														
HM1090500800	**800**	1156	42,89														
HM1090501000	**1000**	1356	49,56														
ØD 115 ØAL 100 ØS 50														**ØD 115 ØAL 100 ØS 60**			
HM16500200	**200**	580	26,43														
HM16500250	**250**	630	28,43														
HM16500300	**300**	680	29,93											HM16600300	**300**	680	32,43
HM16500400	**400**	780	33,43	1/2"	40,2	108	75	85	108	75	85	CSR0010820	CSR0010820	HM16600400	**400**	780	36,43
HM16500500	**500**	880	36,93											HM16600500	**500**	880	40,43
HM16500600	**600**	980	40,43											HM16600600	**600**	980	44,43
HM16500800	**800**	1180	47,43											HM16600800	**800**	1180	52,93
HM16501000	**1000**	1380	54,43											HM16601000	**1000**	1380	61,43

MATERIALE - MATERIAL:
TUBO - TUBE - ROHR: ACCIAIO - STEEL - STAHL St 52.3 DIN 2393 ISO H9
STELO - ROD - KOLBENSTANGE:
ACCIAIO - STEEL - STAHL UNI C45 SAE 1045 - CROMO - CHROME - CHROM: 25 MICRON ±5 Rating 9/120 h ISO 10289 - 1999/ISO 9227-NSS

HM2

CILINDRO DOPPIO EFFETTO
DOUBLE ACTING CYLINDER
DOPPELWIRKENDE ZYLINDER

M250

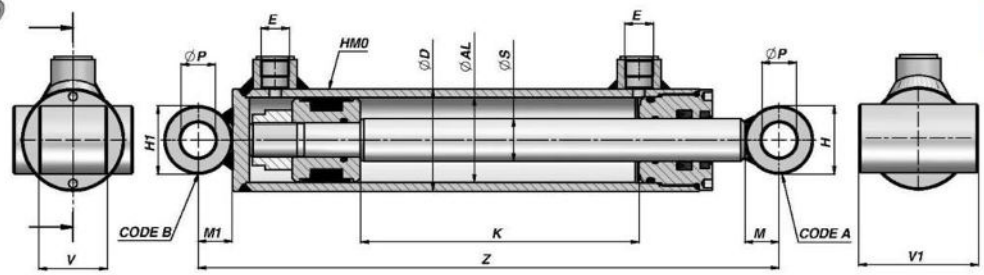

Codice Code Bestell-Nr.	K	Z	kg	E BSP	ØP	H	V	M	H1	V1	M1	Code A	Code B	Codice Code Bestell-Nr.	K	Z	kg
ØD 42 ØAL 32 ØS 20																	
HM2032200050	**50**	190	1,88														
HM2032200100	**100**	240	2,18														
HM2032200150	**150**	290	2,53														
HM2032200200	**200**	340	2,88	1/4"	16,25	35	30	17,5	35	60	17,5	CB16035030	CB16035060				
HM2032200250	**250**	390	3,28														
HM2032200300	**300**	440	3,58														
HM2032200400	**400**	540	4,28														
HM2032200500	**500**	640	4,98														
ØD 50 ØAL 40 ØS 20														**ØD 50 ØAL 40 ØS 25**			
HM21200100	**100**	265	2,85											HM21250100	**100**	265	3,08
HM21200150	**150**	315	3,25											HM21250150	**150**	315	3,53
HM21200200	**200**	365	3,63											HM21250200	**200**	365	3,97
HM21200250	**250**	415	4,03											HM21250250	**250**	415	4,43
HM21200300	**300**	465	4,43											HM21250300	**300**	465	4,90
HM21200350	**350**	515	4,85	1/4"	16,25	35	30	17,5	35	60	17,5	CB16035030	CB16035060	HM21250350	**350**	515	5,37
HM21200400	**400**	565	5,23											HM21250400	**400**	565	5,84
HM21200450	**450**	615	5,66											HM21250450	**450**	615	6,30
HM21200500	**500**	665	6,07											HM21250500	**500**	665	6,78
														HM21250550	**550**	715	7,18
														HM21250600	**600**	765	7,71
ØD 60 ØAL 50 ØS 25														**ØD 60 ØAL 50 ØS 30**			
HM22250100	**100**	280	4,13														
HM22250150	**150**	330	4,67											HM22300150	**150**	330	4,95
HM22250200	**200**	380	5,18											HM22300200	**200**	380	5,58
HM22250250	**250**	430	5,69											HM22300250	**250**	430	6,19
HM22250300	**300**	480	6,19											HM22300300	**300**	480	6,81
HM22250350	**350**	530	6,78											HM22300350	**350**	530	7,39
HM22250400	**400**	580	7,24	3/8"	20,25	40	40	20	40	70	20	CB20040040	CB20040070	HM22300400	**400**	580	8,04
HM22250450	**450**	630	8,14											HM22300450	**450**	630	8,64
HM22250500	**500**	680	8,27											HM22300500	**500**	680	9,26
HM22250550	**550**	730	8,90											HM22300550	**550**	730	9,88
HM22250600	**600**	780	9,30											HM22300600	**600**	780	10,48
														HM22300700	**700**	880	11,69
HM22250800	**800**	980	11,55											HM22300800	**800**	980	12,94
HM22251000	**1000**	1180	13,71											HM22301000	**1000**	1180	15,41
ØD 70 ØAL 60 ØS 30														**ØD 70 ØAL 60 ØS 35**			
HM23300100	**100**	310	6,32											HM23350100	**100**	310	6,57
HM23300150	**150**	360	7,05											HM23350150	**150**	360	7,35
HM23300200	**200**	410	7,70											HM23350200	**200**	410	8,10
HM23300250	**250**	460	8,37											HM23350250	**250**	460	8,90
HM23300300	**300**	510	9,05											HM23350300	**300**	510	9,65
HM23300350	**350**	560	9,70											HM23350350	**350**	560	10,44
HM23300400	**400**	610	10,40	3/8"	25,25	50	50	25	50	80	25	CB25050050	CB25050080	HM23350400	**400**	610	11,22
HM23300450	**450**	660	11,03											HM23350450	**450**	660	11,97
HM23300500	**500**	710	11,75											HM23350500	**500**	710	12,75
HM23300550	**550**	760	12,36											HM23350550	**550**	760	13,50
HM23300600	**600**	810	13,10											HM23350600	**600**	810	14,31
HM23300800	**800**	1010	15,76											HM23350800	**800**	1010	17,37
HM23301000	**1000**	1210	18,50											HM23351000	**1000**	1210	20,43

CILINDRO DOPPIO EFFETTO
DOUBLE ACTING CYLINDER
DOPPELWIRKENDE ZYLINDER

HM2

M250

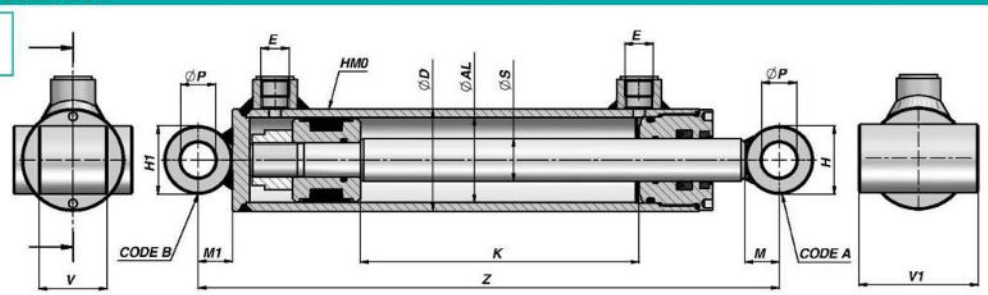

Codice Code Bestell-Nr.	K	Z	kg	E BSP	ØP	H	V	M	H1	V1	M1	Code A	Code B	Codice Code Bestell-Nr.	K	Z	kg
ØD 70 ØAL 60 ØS 40														**ØD 73 ØAL 63 ØS 40**			
HM23400200	**200**	410	8,75											HM2063400200	**200**	410	9,11
HM23400250	**250**	460	9,64											HM2063400250	**250**	460	10,01
HM23400300	**300**	510	10,53											HM2063400300	**300**	510	10,91
HM23400350	**350**	560	11,40											HM2063400350	**350**	560	11,81
HM23400400	**400**	610	12,29											HM2063400400	**400**	610	12,71
HM23400450	**450**	660	13,14	3/8"	25,25	50	50	25	50	80	25	CB25050050	CB25050080	HM2063400450	**450**	660	13,61
HM23400500	**500**	710	14,02											HM2063400500	**500**	710	14,51
HM23400550	**550**	760	14,95											HM2063400550	**550**	760	15,41
HM23400600	**600**	810	15,80											HM2063400600	**600**	810	16,31
HM23400800	**800**	1010	19,32											HM2063400800	**800**	1010	20,01
HM23401000	**1000**	1210	22,90											HM2063401000	**1000**	1210	23,61
ØD 80 ØAL 70 ØS 35														**ØD 80 ØAL 70 ØS 40**			
HM24350100	**100**	310	7,60														
HM24350150	**150**	360	8,46														
HM24350200	**200**	410	9,25											HM24400200	**200**	410	9,79
HM24350250	**250**	460	10,11											HM24400250	**250**	460	10,77
HM24350300	**300**	510	10,91											HM24400300	**300**	510	11,75
HM24350350	**350**	560	11,77											HM24400350	**350**	560	12,71
HM24350400	**400**	610	12,51	3/8"	25,25	50	50	25	50	90	25	CB25050050	CB25050090	HM24400400	**400**	610	14,31
HM24350450	**450**	660	13,39											HM24400450	**450**	660	14,62
HM24350500	**500**	710	14,11											HM24400500	**500**	710	15,52
HM24350550	**550**	760	15,17											HM24400550	**550**	760	16,61
HM24350600	**600**	810	15,71											HM24400600	**600**	810	17,50
HM24350800	**800**	1010	19,07											HM24400800	**800**	1010	21,24
HM24351000	**1000**	1210	22,77											HM24401000	**1000**	1210	25,02
ØD 92 ØAL 80 ØS 40														**ØD 92 ØAL 80 ØS 50**			
HM25400200	**200**	440	13,91											HM25500200	**200**	440	15,18
HM25400250	**250**	490	15,05											HM25500250	**250**	490	16,56
HM25400300	**300**	540	16,18											HM25500300	**300**	540	17,98
HM25400400	**400**	640	18,39	1/2"	30,25	60	60	30	60	110	30	CB30060060	CB30060110	HM25500400	**400**	640	20,78
HM25400500	**500**	740	20,60											HM25500500	**500**	740	23,54
HM25400600	**600**	840	22,81											HM25500600	**600**	840	26,83
HM25400800	**800**	1040	27,33											HM25500800	**800**	1040	32,33
HM25401000	**1000**	1240	31,75											HM25501000	**1000**	1240	37,83
ØD 105 ØAL 90 ØS 50																	
HM2090500300	**300**	556	23,63														
HM2090500400	**400**	656	26,97														
HM2090500500	**500**	756	30,30	1/2"	40,25	70	70	35	70	130	35	CB40070070	CB40070130				
HM2090500600	**600**	856	33,63														
HM2090500800	**800**	1056	40,30														
HM2090501000	**1000**	1256	46,97														
ØD 115 ØAL 100 ØS 50														**ØD 115 ØAL 100 ØS 60**			
HM26500200	**200**	480	23,84														
HM26500250	**250**	530	25,84														
HM26500300	**300**	580	27,34											HM26600300	**300**	580	29,84
HM26500400	**400**	680	30,84	1/2"	40,25	70	70	35	70	130	35	CB40070070	CB40070130	HM26600400	**400**	680	33,84
HM26500500	**500**	780	34,34											HM26600500	**500**	780	37,84
HM26500600	**600**	880	37,84											HM26600600	**600**	880	41,84
HM26500800	**800**	1080	44,84											HM26600800	**800**	1080	50,34
HM26501000	**1000**	1280	51,84											HM26601000	**1000**	1280	58,84

MATERIALE - MATERIAL:
TUBO - TUBE - ROHR: ACCIAIO - STEEL - STAHL St 52.3 DIN 2393 ISO H9
STELO - ROD - KOLBENSTANGE:
ACCIAIO - STEEL - STAHL UNI C45 SAE 1045 - CROMO - CHROME - CHROM: 25 MICRON ±5 Rating 9/120 h ISO 10289 - 1999/ISO 9227-NSS

HM5

CILINDRO DOPPIO EFFETTO
DOUBLE ACTING CYLINDER
DOPPELWIRKENDE ZYLINDER

M250

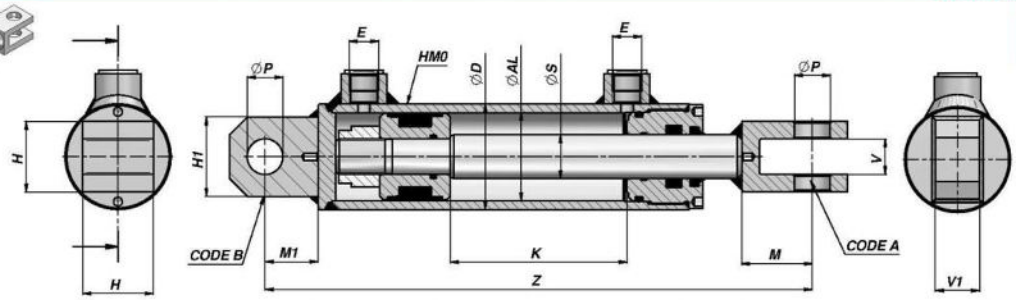

Codice Code Bestell-Nr.	K	Z	kg	E BSP	ØP	H	V	M	H1	V1	M1	Code A	Code B	Codice Code Bestell-Nr.	K	Z	kg
ØD 42 ØAL 32 ØS 20																	
HM5032200050	**50**	214	1,79														
HM5032200100	**100**	264	2,09														
HM5032200150	**150**	314	2,44														
HM5032200200	**200**	364	2,79	1/4"	16,20	35	16	34	35	20	25	CFS0000016	COF1600000				
HM5032200250	**250**	414	3,19														
HM5032200300	**300**	464	3,49														
HM5032200400	**400**	564	4,19														
HM5032200500	**500**	664	4,89														
ØD 50 ØAL 40 ØS 20														**ØD 50 ØAL 40 ØS 25**			
HM51200100	**100**	289	2,76											HM51250100	**100**	289	2,99
HM51200150	**150**	339	3,16											HM51250150	**150**	339	3,44
HM51200200	**200**	389	3,54											HM51250200	**200**	389	3,88
HM51200250	**250**	439	3,94											HM51250250	**250**	439	4,34
HM51200300	**300**	489	4,34											HM51250300	**300**	489	4,81
HM51200350	**350**	539	4,76	1/4"	16,20	35	16	34	35	20	25	CFS0000016	COF1600000	HM51250350	**350**	539	5,28
HM51200400	**400**	589	5,14											HM51250400	**400**	589	5,75
HM51200450	**450**	639	5,57											HM51250450	**450**	639	6,21
HM51200500	**500**	689	5,98											HM51250500	**500**	689	6,69
														HM51250550	**550**	739	7,09
														HM51250600	**600**	789	7,62
ØD 60 ØAL 50 ØS 25														**ØD 60 ØAL 50 ØS 30**			
HM52250100	**100**	310	4,07														
HM52250150	**150**	360	4,61											HM52300150	**150**	360	4,89
HM52250200	**200**	410	5,12											HM52300200	**200**	410	5,52
HM52250250	**250**	460	5,63											HM52300250	**250**	460	6,13
HM52250300	**300**	510	6,13											HM52300300	**300**	510	6,75
HM52250350	**350**	560	6,72											HM52300350	**350**	560	7,33
HM52250400	**400**	610	7,18	3/8"	20,25	40	20	40	45	25	30	CFS0000020	COF2000000	HM52300400	**400**	610	7,98
HM52250450	**450**	660	8,08											HM52300450	**450**	660	8,58
HM52250500	**500**	710	8,21											HM52300500	**500**	710	9,20
HM52250550	**550**	760	8,84											HM52300550	**550**	760	9,82
HM52250600	**600**	810	9,24											HM52300600	**600**	810	10,42
														HM52300700	**700**	910	11,63
HM52250800	**800**	1010	11,49											HM52300800	**800**	1010	12,88
HM52251000	**1000**	1210	13,65											HM52301000	**1000**	1210	15,35
ØD 70 ØAL 60 ØS 30														**ØD 70 ØAL 60 ØS 35**			
HM53300100	**100**	340	6,14											HM53350100	**100**	340	6,39
HM53300150	**150**	390	6,87											HM53350150	**150**	390	7,17
HM53300200	**200**	440	7,52											HM53350200	**200**	440	7,92
HM53300250	**250**	490	8,19											HM53350250	**250**	490	8,72
HM53300300	**300**	540	8,87											HM53350300	**300**	540	9,47
HM53300350	**350**	590	9,52											HM53350350	**350**	590	10,26
HM53300400	**400**	640	10,22	3/8"	25,25	50	25	45	50	30	35	CFS0000025	COF2500000	HM53350400	**400**	640	11,04
HM53300450	**450**	690	10,85											HM53350450	**450**	690	11,79
HM53300500	**500**	740	11,57											HM53350500	**500**	740	12,57
HM53300550	**550**	790	12,18											HM53350550	**550**	790	13,32
HM53300600	**600**	840	12,92											HM53350600	**600**	840	14,13
HM53300800	**800**	1040	15,58											HM53350800	**800**	1040	17,19
HM53301000	**1000**	1240	18,32											HM53351000	**1000**	1240	20,25

CILINDRO DOPPIO EFFETTO
DOUBLE ACTING CYLINDER
DOPPELWIRKENDE ZYLINDER

HM5

M250

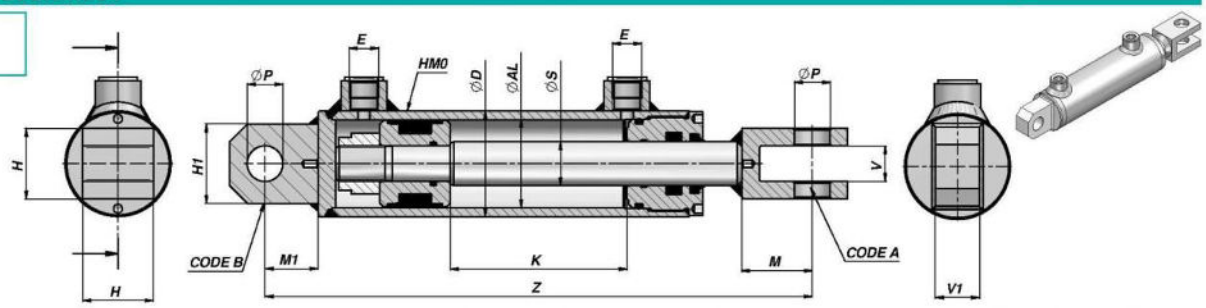

Codice Code Bestell-Nr.	K	Z	kg	E BSP	ØP	H	V	M	H1	V1	M1	Code A	Code B	Codice Code Bestell-Nr.	K	Z	kg
ØD 70 ØAL 60 ØS 40														**ØD 73 ØAL 63 ØS 40**			
HM53400200	**200**	440	8,57											HM5063400200	**200**	440	8,93
HM53400250	**250**	490	9,46											HM5063400250	**250**	490	9,83
HM53400300	**300**	540	10,35											HM5063400300	**300**	540	10,73
HM53400350	**350**	590	11,22											HM5063400350	**350**	590	11,63
HM53400400	**400**	640	12,11									CFS0000025	COF2500000	HM5063400400	**400**	640	12,53
HM53400450	**450**	690	12,96	3/8"	25,25	50	25	45	50	30	35			HM5063400450	**450**	690	13,43
HM53400500	**500**	740	13,84											HM5063400500	**500**	740	14,33
HM53400550	**550**	790	14,77											HM5063400550	**550**	790	15,23
HM53400600	**600**	840	15,62											HM5063400600	**600**	840	16,13
HM53400800	**800**	1040	19,14											HM5063400800	**800**	1040	19,83
HM53401000	**1000**	1240	22,72											HM5063401000	**1000**	1240	23,43
ØD 80 ØAL 70 ØS 35														**ØD 80 ØAL 70 ØS 40**			
HM54350100	**100**	340	7,42														
HM54350150	**150**	390	8,28														
HM54350200	**200**	440	9,07											HM54400200	**200**	440	9,61
HM54350250	**250**	490	9,93											HM54400250	**250**	490	10,59
HM54350300	**300**	540	10,73											HM54400300	**300**	540	11,57
HM54350350	**350**	590	11,59											HM54400350	**350**	590	12,53
HM54350400	**400**	640	12,33	3/8"	25,25	50	25	45	50	30	35	CFS0000025	COF2500000	HM54400400	**400**	640	14,13
HM54350450	**450**	690	13,21											HM54400450	**450**	690	14,44
HM54350500	**500**	740	13,93											HM54400500	**500**	740	15,34
HM54350550	**550**	790	14,99											HM54400550	**550**	790	16,43
HM54350600	**600**	840	15,53											HM54400600	**600**	840	17,32
HM54350800	**800**	1040	18,89											HM54400800	**800**	1040	21,06
HM54351000	**1000**	1240	22,59											HM54401000	**1000**	1240	24,84
ØD 92 ØAL 80 ØS 40														**ØD 92 ØAL 80 ØS 50**			
HM55400200	**200**	475	13,22											HM55500200	**200**	475	14,49
HM55400250	**250**	525	14,36											HM55500250	**250**	525	15,87
HM55400300	**300**	575	15,49											HM55500300	**300**	575	17,29
HM55400400	**400**	675	17,70											HM55500400	**400**	675	20,09
HM55400500	**500**	775	19,91	1/2"	30,25	60	30	50	60	35	45	CFS0000030	COF3000000	HM55500500	**500**	775	22,85
HM55400600	**600**	875	22,12											HM55500600	**600**	875	26,14
HM55400800	**800**	1075	26,64											HM55500800	**800**	1075	31,64
HM55401000	**1000**	1275	31,06											HM55501000	**1000**	1275	37,14
ØD 105 ØAL 90 ØS 50																	
HM5090500300	**300**	616	23,58														
HM5090500400	**400**	716	26,92														
HM5090500500	**500**	816	30,25	1/2"	40,25	80	40	70	70	40	60	CFS0000040	COF4000000				
HM5090500600	**600**	916	33,58														
HM5090500800	**800**	1116	40,25														
HM5090501000	**1000**	1316	46,92														
ØD 115 ØAL 100 ØS 50														**ØD 115 ØAL 100 ØS 60**			
HM56500200	**200**	540	23,79														
HM56500250	**250**	590	25,79														
HM56500300	**300**	640	27,29											HM56600300	**300**	640	29,79
HM56500400	**400**	740	30,79											HM56600400	**400**	740	33,79
HM56500500	**500**	840	34,29	1/2"	40,25	80	40	70	70	40	60	CFS0000040	COF4000000	HM56600500	**500**	840	37,79
HM56500600	**600**	940	37,79											HM56600600	**600**	940	41,79
HM56500800	**800**	1140	44,79											HM56600800	**800**	1140	50,29
HM56501000	**1000**	1340	51,79											HM56601000	**1000**	1340	58,79

MATERIALE - MATERIAL:
TUBO - TUBE - ROHR: ACCIAIO - STEEL - STAHL St 52.3 DIN 2393 ISO H9
STELO - ROD - KOLBENSTANGE:
ACCIAIO - STEEL - STAHL UNI C45 SAE 1045 - CROMO - CHROME - CHROM: 25 MICRON ±5 Rating 9/120 h ISO 10289 - 1999/ISO 9227-NSS

HMB

CILINDRO DOPPIO EFFETTO
DOUBLE ACTING CYLINDER
DOPPELWIRKENDE ZYLINDER

M250

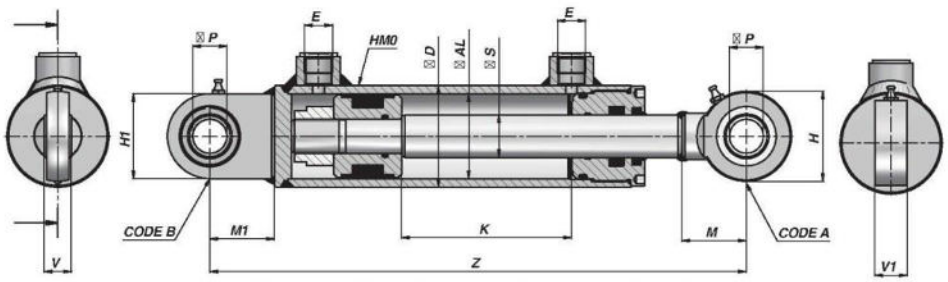

Codice Code Bestell-Nr.	K	Z	kg	E BSP	ØP	H	V	M	H1	V1	M1	Code A	Code B	Codice Code Bestell-Nr.	K	Z	kg
ØD 42 ØAL 32 ØS 20																	
HMB032200050	**50**	225	1,80														
HMB032200100	**100**	275	2,10														
HMB032200150	**150**	325	2,45														
HMB032200200	**200**	375	2,80	1/4"	16	46	14	35	48	17,5	35	CSTSO16C00	CSTSO16N00				
HMB032200250	**250**	425	3,20														
HMB032200300	**300**	475	3,50														
HMB032200400	**400**	575	4,20														
HMB032200500	**500**	675	4,90														
ØD 50 ØAL 40 ØS 20														**ØD 50 ØAL 40 ØS 25**			
HMB1200100	**100**	300	2,77											HMB1250100	**100**	300	3,00
HMB1200150	**150**	350	3,17											HMB1250150	**150**	350	3,45
HMB1200200	**200**	400	3,55											HMB1250200	**200**	400	3,89
HMB1200250	**250**	450	3,95											HMB1250250	**250**	450	4,35
HMB1200300	**300**	500	4,35											HMB1250300	**300**	500	4,82
HMB1200350	**350**	550	4,77	1/4"	16	46	14	35	48	17,5	35	CSTSO16C00	CSTSO16N00	HMB1250350	**350**	550	5,29
HMB1200400	**400**	600	5,15											HMB1250400	**400**	600	5,76
HMB1200450	**450**	650	5,58											HMB1250450	**450**	650	6,22
HMB1200500	**500**	700	5,99											HMB1250500	**500**	700	6,70
														HMB1250550	**550**	750	7,10
														HMB1250600	**600**	800	7,63
ØD 60 ØAL 50 ØS 25														**ØD 60 ØAL 50 ØS 30**			
HMB2250100	**100**	316	3,94														
HMB2250150	**150**	366	4,48											HMB2300150	**150**	366	4,76
HMB2250200	**200**	416	4,99											HMB2300200	**200**	416	5,39
HMB2250250	**250**	466	5,50											HMB2300250	**250**	466	6,00
HMB2250300	**300**	516	6,00											HMB2300300	**300**	516	6,62
HMB2250350	**350**	566	6,59											HMB2300350	**350**	566	7,20
HMB2250400	**400**	616	7,05	3/8"	20	53	16	38	50	19	38	CSTSO20C00	CSTSO20N00	HMB2300400	**400**	616	7,85
HMB2250450	**450**	666	7,95											HMB2300450	**450**	666	8,45
HMB2250500	**500**	716	8,08											HMB2300500	**500**	716	9,07
HMB2250550	**550**	766	8,71											HMB2300550	**550**	766	9,69
HMB2250600	**600**	816	9,11											HMB2300600	**600**	816	10,29
														HMB2300700	**700**	916	11,50
HMB2250800	**800**	1016	11,36											HMB2300800	**800**	1016	12,75
HMB2251000	**1000**	1216	13,52											HMB2301000	**1000**	1216	15,22
ØD 70 ØAL 60 ØS 30														**ØD 70 ØAL 60 ØS 35**			
HMB3300100	**100**	350	5,85											HMB3350100	**100**	350	6,10
HMB3300150	**150**	400	6,58											HMB3350150	**150**	400	6,88
HMB3300200	**200**	450	7,23											HMB3350200	**200**	450	7,63
HMB3300250	**250**	500	7,90											HMB3350250	**250**	500	8,43
HMB3300300	**300**	550	8,58											HMB3350300	**300**	550	9,18
HMB3300350	**350**	600	9,23											HMB3350350	**350**	600	9,97
HMB3300400	**400**	650	9,93	3/8"	25	64	20	45	55	23	45	CSTSO25C00	CSTSO25N00	HMB3350400	**400**	650	10,75
HMB3300450	**450**	700	10,56											HMB3350450	**450**	700	11,50
HMB3300500	**500**	750	11,28											HMB3350500	**500**	750	12,28
HMB3300550	**550**	800	11,89											HMB3350550	**550**	800	13,03
HMB3300600	**600**	850	12,63											HMB3350600	**600**	850	13,84
HMB3300800	**800**	1050	15,29											HMB3350800	**800**	1050	16,90
HMB3301000	**1000**	1250	18,03											HMB3351000	**1000**	1250	19,96

CILINDRO DOPPIO EFFETTO
DOUBLE ACTING CYLINDER
DOPPELWIRKENDE ZYLINDER

HMB

M250

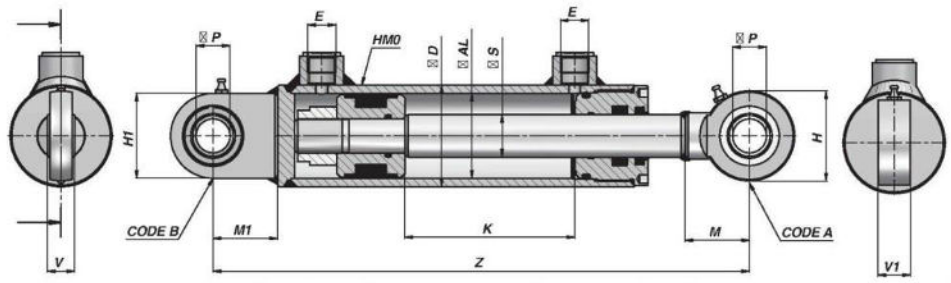

Codice Code Bestell-Nr.	K	Z	kg	E BSP	ØP	H	V	M	H1	V1	M1	Code A	Code B	Codice Code Bestell-Nr.	K	Z	kg
ØD 70 ØAL 60 ØS 40														**ØD 73 ØAL 63 ØS 40**			
HMB3400200	**200**	450	8,28											HMB063400200	**200**	450	8,64
HMB3400250	**250**	500	9,17											HMB063400250	**250**	500	9,54
HMB3400300	**300**	550	10,06											HMB063400300	**300**	550	10,44
HMB3400350	**350**	600	10,93											HMB063400350	**350**	600	11,34
HMB3400400	**400**	650	11,82											HMB063400400	**400**	650	12,24
HMB3400450	**450**	700	12,67	3/8"	25	64	20	45	55	23	45	CSTS025C00	CSTS025N00	HMB063400450	**450**	700	13,14
HMB3400500	**500**	750	13,55											HMB063400500	**500**	750	14,04
HMB3400550	**550**	800	14,48											HMB063400550	**550**	800	14,94
HMB3400600	**600**	850	15,33											HMB063400600	**600**	850	15,84
HMB3400800	**800**	1050	18,85											HMB063400800	**800**	1050	19,54
HMB3401000	**1000**	1250	22,43											HMB063401000	**1000**	1250	23,14
ØD 80 ØAL 70 ØS 35														**ØD 80 ØAL 70 ØS 40**			
HMB4350100	**100**	350	7,13														
HMB4350150	**150**	400	7,99														
HMB4350200	**200**	450	8,78											HMB4400200	**200**	450	9,32
HMB4350250	**250**	500	9,64											HMB4400250	**250**	500	10,30
HMB4350300	**300**	550	10,44											HMB4400300	**300**	550	11,28
HMB4350350	**350**	600	11,30											HMB4400350	**350**	600	12,24
HMB4350400	**400**	650	12,04	3/8"	25	64	20	45	55	23	45	CSTS025C00	CSTS025N00	HMB4400400	**400**	650	13,84
HMB4350450	**450**	700	12,92											HMB4400450	**450**	700	14,15
HMB4350500	**500**	750	13,64											HMB4400500	**500**	750	15,05
HMB4350550	**550**	800	14,70											HMB4400550	**550**	800	16,14
HMB4350600	**600**	850	15,24											HMB4400600	**600**	850	17,03
HMB4350800	**800**	1050	18,60											HMB4400800	**800**	1050	20,77
HMB4351000	**1000**	1250	22,30											HMB4401000	**1000**	1250	24,55
ØD 92 ØAL 80 ØS 40														**ØD 92 ØAL 80 ØS 50**			
HMB5400200	**200**	482	12,67											HMB5500200	**200**	482	13,94
HMB5400250	**250**	532	13,81											HMB5500250	**250**	532	15,32
HMB5400300	**300**	582	14,94											HMB5500300	**300**	582	16,74
HMB5400400	**400**	682	17,15	1/2"	30	73	22	51	65	28	51	CSTS030C00	CSTS030N00	HMB5500400	**400**	682	19,54
HMB5400500	**500**	782	19,36											HMB5500500	**500**	782	22,30
HMB5400600	**600**	882	21,57											HMB5500600	**600**	882	25,59
HMB5400800	**800**	1082	26,09											HMB5500800	**800**	1082	31,09
HMB5401000	**1000**	1282	30,51											HMB5501000	**1000**	1282	36,59
ØD 105 ØAL 90 ØS 50																	
HMB090500300	**300**	624	23,26														
HMB090500400	**400**	724	26,60														
HMB090500500	**500**	824	29,93	1/2"	40	92	28	69	100	35	69	CSTS040C00	CSTS040N00				
HMB090500600	**600**	924	33,26														
HMB090500800	**800**	1124	39,93														
HMB090501000	**1000**	1324	46,60														
ØD 115 ØAL 100 ØS 50														**ØD 115 ØAL 100 ØS 60**			
HMB6500200	**200**	548	23,47														
HMB6500250	**250**	598	25,47														
HMB6500300	**300**	648	26,97											HMB6600300	**300**	648	29,47
HMB6500400	**400**	748	30,47	1/2"	40	92	28	69	100	35	69	CSTS040C00	CSTS040N00	HMB6600400	**400**	748	33,47
HMB6500500	**500**	848	33,97											HMB6600500	**500**	848	37,47
HMB6500600	**600**	948	37,47											HMB6600600	**600**	948	41,47
HMB6500800	**800**	1148	44,47											HMB6600800	**800**	1148	49,97
HMB6501000	**1000**	1348	51,47											HMB6601000	**1000**	1348	58,47

MATERIALE - MATERIAL:
TUBO - TUBE - ROHR: ACCIAIO - STEEL - STAHL St 52.3 DIN 2393 ISO H9
STELO - ROD - KOLBENSTANGE:
ACCIAIO - STEEL - STAHL UNI C45 SAE 1045 - CROMO - CHROME - CHROM: 25 MICRON ±5 Rating 9/120 h ISO 10289 - 1999/ISO 9227-NSS

HMC

CILINDRO DOPPIO EFFETTO
DOUBLE ACTING CYLINDER
DOPPELWIRKENDE ZYLINDER

M250

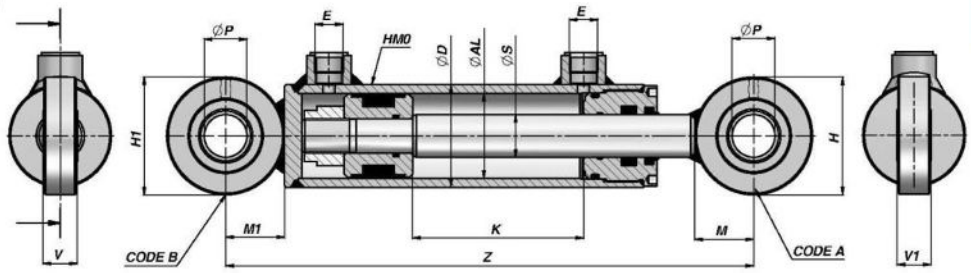

Codice Code Bestell-Nr.	K	Z	kg	E BSP	ØP	H	V	M	H1	V1	M1	Code A	Code B	Codice Code Bestell-Nr.	K	Z	kg
ØD 42 ØAL 32 ØS 20																	
HMC032200050	**50**	195	1,46														
HMC032200100	**100**	245	1,76														
HMC032200150	**150**	295	2,11														
HMC032200200	**200**	345	2,46	1/4"	15	40	12	20	40	12	20	CAGEG04002615	CAGEG04002615				
HMC032200250	**250**	395	2,86														
HMC032200300	**300**	445	3,16														
HMC032200400	**400**	545	3,86														
HMC032200500	**500**	645	4,56														
ØD 50 ØAL 40 ØS 20														**ØD 50 ØAL 40 ØS 25**			
HMC1200100	**100**	280	2,53											HMC1250100	**100**	280	2,76
HMC1200150	**150**	330	2,93											HMC1250150	**150**	330	3,21
HMC1200200	**200**	380	3,31											HMC1250200	**200**	380	3,65
HMC1200250	**250**	430	3,71											HMC1250250	**250**	430	4,11
HMC1200300	**300**	480	4,11											HMC1250300	**300**	480	4,58
HMC1200350	**350**	530	4,53	1/4"	20	50	16	25	50	16	25	CAGEG05003520	CAGEG05003520	HMC1250350	**350**	530	5,05
HMC1200400	**400**	580	4,91											HMC1250400	**400**	580	5,52
HMC1200450	**450**	630	5,34											HMC1250450	**450**	630	5,98
HMC1200500	**500**	680	5,75											HMC1250500	**500**	680	6,46
														HMC1250550	**550**	730	6,86
														HMC1250600	**600**	780	7,39
ØD 60 ØAL 50 ØS 25														**ØD 60 ØAL 50 ØS 30**			
HMC2250100	**100**	309	4,04														
HMC2250150	**150**	359	4,58											HMC2300150	**150**	359	4,86
HMC2250200	**200**	409	5,09											HMC2300200	**200**	409	5,49
HMC2250250	**250**	459	5,60											HMC2300250	**250**	459	6,10
HMC2250300	**300**	509	6,10											HMC2300300	**300**	509	6,72
HMC2250350	**350**	559	6,69											HMC2300350	**350**	559	7,30
HMC2250400	**400**	609	7,15	3/8"	25	69	20	34,5	69	20	34,5	CAGEG06904225	CAGEG06904225	HMC2300400	**400**	609	7,95
HMC2250450	**450**	659	8,05											HMC2300450	**450**	659	8,55
HMC2250500	**500**	709	8,18											HMC2300500	**500**	709	9,17
HMC2250550	**550**	759	8,81											HMC2300550	**550**	759	9,79
HMC2250600	**600**	809	9,21											HMC2300600	**600**	809	10,39
														HMC2300700	**700**	909	11,60
HMC2250800	**800**	1009	11,46											HMC2300800	**800**	1009	12,85
HMC2251000	**1000**	1209	13,62											HMC2301000	**1000**	1209	15,32
ØD 70 ØAL 60 ØS 30														**ØD 70 ØAL 60 ØS 35**			
HMC3300100	**100**	329	5,57											HMC3350100	**100**	329	5,82
HMC3300150	**150**	379	6,30											HMC3350150	**150**	379	6,60
HMC3300200	**200**	429	6,95											HMC3350200	**200**	429	7,35
HMC3300250	**250**	479	7,62											HMC3350250	**250**	479	8,15
HMC3300300	**300**	529	8,30											HMC3350300	**300**	529	8,90
HMC3300350	**350**	579	8,95											HMC3350350	**350**	579	9,69
HMC3300400	**400**	629	9,65	3/8"	25	69	20	34,5	69	20	34,5	CAGEG06904225	CAGEG06904225	HMC3350400	**400**	629	10,47
HMC3300450	**450**	679	10,28											HMC3350450	**450**	679	11,22
HMC3300500	**500**	729	11,00											HMC3350500	**500**	729	12,00
HMC3300550	**550**	779	11,61											HMC3350550	**550**	779	12,75
HMC3300600	**600**	829	12,35											HMC3350600	**600**	829	13,56
HMC3300800	**800**	1029	15,01											HMC3350800	**800**	1029	16,62
HMC3301000	**1000**	1229	17,75											HMC3351000	**1000**	1229	19,68

CILINDRO DOPPIO EFFETTO
DOUBLE ACTING CYLINDER
DOPPELWIRKENDE ZYLINDER

HMC

M250

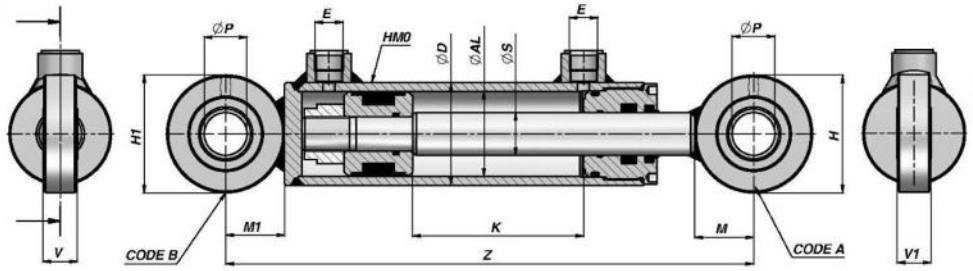

Codice Code Bestell-Nr.	K	Z	kg	E BSP	ØP	H	V	M	H1	V1	M1	Code A	Code B	Codice Code Bestell-Nr.	K	Z	kg
ØD 70 ØAL 60 ØS 40														**ØD 73 ØAL 63 ØS 40**			
HMC3400200	**200**	429	8,00											HMC063400200	**200**	429	8,36
HMC3400250	**250**	479	8,89											HMC063400250	**250**	479	9,26
HMC3400300	**300**	529	9,78											HMC063400300	**300**	529	10,16
HMC3400350	**350**	579	10,65											HMC063400350	**350**	579	11,06
HMC3400400	**400**	629	11,54									CAGEG06904225	CAGEG06904225	HMC063400400	**400**	629	11,96
HMC3400450	**450**	679	12,39	3/8"	25	69	20	34,5	69	20	34,5			HMC063400450	**450**	679	12,86
HMC3400500	**500**	729	13,27											HMC063400500	**500**	729	13,76
HMC3400550	**550**	779	14,20											HMC063400550	**550**	779	14,66
HMC3400600	**600**	829	15,05											HMC063400600	**600**	829	15,56
HMC3400800	**800**	1029	18,57											HMC063400800	**800**	1029	19,26
HMC3401000	**1000**	1229	22,15											HMC063401000	**1000**	1229	22,86
ØD 80 ØAL 70 ØS 35														**ØD 80 ØAL 70 ØS 40**			
HMC4350100	**100**	335	6,97														
HMC4350150	**150**	385	7,83														
HMC4350200	**200**	435	8,62											HMC4400200	**200**	435	9,16
HMC4350250	**250**	485	9,48											HMC4400250	**250**	485	10,14
HMC4350300	**300**	535	10,28											HMC4400300	**300**	535	11,12
HMC4350350	**350**	585	11,14											HMC4400350	**350**	585	12,08
HMC4350400	**400**	635	11,88	3/8"	30	75	22	37,5	75	22	37,5	CAGEG07504730	CAGEG07504730	HMC4400400	**400**	635	13,68
HMC4350450	**450**	685	12,76											HMC4400450	**450**	685	13,99
HMC4350500	**500**	735	13,48											HMC4400500	**500**	735	14,89
HMC4350550	**550**	785	14,54											HMC4400550	**550**	785	15,98
HMC4350600	**600**	835	15,08											HMC4400600	**600**	835	16,87
HMC4350800	**800**	1035	18,44											HMC4400800	**800**	1035	20,61
HMC4351000	**1000**	1235	22,14											HMC4401000	**1000**	1235	24,39
ØD 92 ØAL 80 ØS 40														**ØD 92 ØAL 80 ØS 50**			
HMC5400200	**200**	474	12,73											HMC5500200	**200**	474	14,00
HMC5400250	**250**	524	13,87											HMC5500250	**250**	524	15,38
HMC5400300	**300**	574	15,00											HMC5500300	**300**	574	16,80
HMC5400400	**400**	674	17,21	1/2"	40	94	28	47	94	28	47	CAGEG09406240	CAGEG09406240	HMC5500400	**400**	674	19,60
HMC5400500	**500**	774	19,42											HMC5500500	**500**	774	22,36
HMC5400600	**600**	874	21,63											HMC5500600	**600**	874	25,65
HMC5400800	**800**	1074	26,15											HMC5500800	**800**	1074	31,15
HMC5401000	**1000**	1274	30,57											HMC5501000	**1000**	1274	36,65
ØD 105 ØAL 90 ØS 50																	
HMC090500300	**300**	580	20,96														
HMC090500400	**400**	680	24,30														
HMC090500500	**500**	780	27,63	1/2"	40	94	28	47	94	28	47	CAGEG09406240	CAGEG09406240				
HMC090500600	**600**	880	30,96														
HMC090500800	**800**	1080	37,63														
HMC090501000	**1000**	1280	44,30														
ØD 115 ØAL 100 ØS 50														**ØD 115 ØAL 100 ØS 60**			
HMC6500200	**200**	530	23,95														
HMC6500250	**250**	580	25,95														
HMC6500300	**300**	630	27,45											HMC6600300	**300**	630	29,95
HMC6500400	**400**	730	30,95	1/2"	50	120	40	60	120	40	60	CAGEN12040050 + CGE0500000	CAGEN12040050 + CGE0500000	HMC6600400	**400**	730	33,95
HMC6500500	**500**	830	34,45											HMC6600500	**500**	830	37,95
HMC6500600	**600**	930	37,95											HMC6600600	**600**	930	41,95
HMC6500800	**800**	1130	44,95											HMC6600800	**800**	1130	50,45
HMC6501000	**1000**	1330	51,95											HMC6601000	**1000**	1330	58,95

MATERIALE - MATERIAL:
TUBO - TUBE - ROHR: ACCIAIO - STEEL - STAHL St 52.3 DIN 2393 ISO H9
STELO - ROD - KOLBENSTANGE:
ACCIAIO - STEEL - STAHL UNI C45 SAE 1045 - CROMO - CHROME - CHROM: 25 MICRON ±5 Rating 9/120 h ISO 10289 - 1999/ISO 9227-NSS

CILINDRO DOPPIO EFFETTO
DOUBLE ACTING CYLINDER
DOPPELWIRKENDE ZYLINDER

HMF

M250

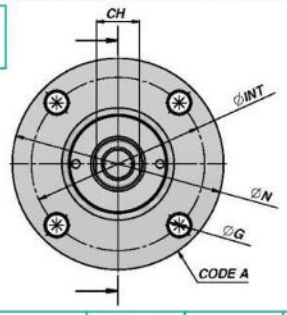

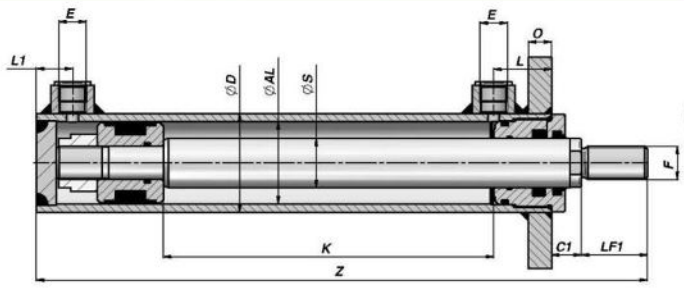

Codice Code Bestell-Nr.	K	Z	kg	E BSP	L	L1	F	LF1	CH	C1	ØN	ØINT	ØG	O	Code A
ØD 50	**ØAL 40**	**ØS 20**													
HMF1200100	**100**	250	3,00	1/4"	32	25	M16x1,5	30	18	18	109	87	ø 11 x 4	12	CFL0050109
HMF1200200	**200**	350	3,80												
HMF1200300	**300**	450	4,60												
HMF1200400	**400**	550	5,40												
HMF1200500	**500**	650	6,20												
ØD 60	**ØAL 50**	**ØS 30**													
HMF2300100	**100**	270	4,60	3/8"	35	25	M20x1,5	40	26	18	128	105	ø 13 x 4	14	CFL0060128
HMF2300200	**200**	370	5,80												
HMF2300300	**300**	470	7,00												
HMF2300400	**400**	570	8,20												
HMF2300500	**500**	670	9,40												
ØD 70	**ØAL 60**	**ØS 35**													
HMF3350100	**100**	300	6,90	3/8"	40	30	M27x2	50	32	20	142	117	ø 13 x 4	16	CFL0070142
HMF3350200	**200**	400	8,40												
HMF3350300	**300**	500	9,90												
HMF3350400	**400**	600	11,40												
HMF3350500	**500**	700	12,90												
ØD 80	**ØAL 70**	**ØS 40**													
HMF4400100	**100**	312	8,63	3/8"	40	30	M30x2	60	36	22	162	127	ø 15 x 4	16	CFL0080162
HMF4400200	**200**	412	10,53												
HMF4400300	**300**	512	12,76												
HMF4400400	**400**	612	15,00												
HMF4400500	**500**	712	17,20												
ØD 95	**ØAL 80**	**ØS 50**													
HMF5500100	**100**	345	13,70	1/2"	50	40	M36x2	70	45	25	181	149	ø 17 x 6	18	CFL0095181
HMF5500200	**200**	445	16,80												
HMF5500300	**300**	545	19,90												
HMF5500400	**400**	645	23,00												
HMF5500500	**500**	745	26,10												
ØD 115	**ØAL 100**	**ØS 50**													
HMF6500100	**100**	375	20,20	1/2"	70	40	M36x2	70	45	27	194	162	ø 17 x 6	24	CFL0115194
HMF6500200	**200**	475	25,80												
HMF6500300	**300**	575	27,20												
HMF6500400	**400**	675	30,80												
HMF6500500	**500**	775	34,40												

MATERIALE - MATERIAL:
TUBO - TUBE - ROHR: ACCIAIO - STEEL - STAHL St 52.3 DIN 2393 ISO H9
STELO - ROD - KOLBENSTANGE:
ACCIAIO - STEEL - STAHL UNI C45 SAE 1045 - CROMO - CHROME - CHROM: 25 MICRON ±5 Rating 9/120 h ISO 10289 - 1999/ISO 9227-NSS

MODEL C1 / BAUFORM C1 / MOUNTING STYLE C1

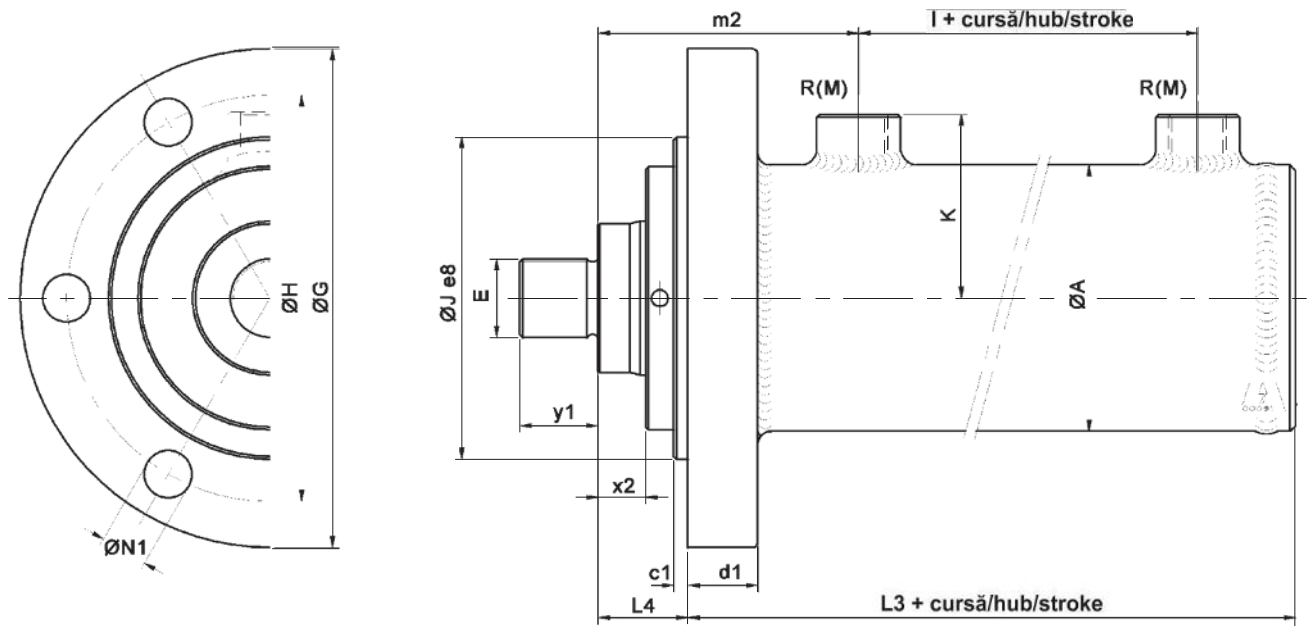

CYLINDER TYPE																		Dimensions (mm)
							R	L3	L4	A	E	G	H	J	K	N1	c1	d1	l	m2	x2	y1
MCDC1- 25/	12						R1/8"	72	21	35	M10 x 1,5	85	68	50	26	9	3	10	38	40	8	15
MCDC1- 25/	16						R1/8"	70	26	35	M10 x 1,5	85	68	50	26	9	3	10	25	55	10	15
MCDC1- 30/	20	22					R1/4"	108	25	40	M14 x 1,5	94	75	60	36	9	5	12	53	60	10	14
MCDC1- 32/	20	22					R1/4"	108	25	42	M14 x 1,5	94	75	60	37	9	5	12	53	60	10	14
MCDC1- 35/	20	22	25				R1/4"	108	25	45	M14 x 1,5	94	75	60	39	9	5	12	53	60	10	14
MCDC1- 40/	20	22	25	28	30		R3/8"	119	27	50	M16 x 1,5	104	85	65	41	11	5	15	48	67	12	16
MCDC1- 50/	25	30	35				R3/8"	135	30	60	M16 x 1,5	118	95	75	46	11	5	18	57	75	15	16
MCDC1- 60/	30	35	40				R1/2"	148	31	70	M22 x 1,5	138	115	90	53	13	5	22	61	82	16	22
MCDC1- 63/	32	35	36	40	45		R1/2"	148	31	75	M22 x 1,5	138	115	90	56	13	5	22	61	82	16	22
MCDC1- 65/	30	32	35	40	45		R1/2"	148	31	75	M22 x 1,5	138	115	90	56	13	5	22	61	82	16	22
MCDC1- 70/	35	40	45	50			R1/2"	148	31	80	M22 x 1,5	138	115	90	58	13	5	22	61	82	16	22
MCDC1- 80/	40	45	50	55	60		R1/2"	167	32	95	M28 x 1,5	178	145	115	66	17	5	25	68	93	17	28
MCDC1- 90/	45	50	55	60	65		R1/2"	167	32	105	M28 x 1,5	178	145	115	71	17	5	25	68	93	17	28
MCDC1- 100/	50	55	60	70			R1/2"	175	32	115	M35 x 1,5	205	170	140	76	17	5	35	64	101	17	35
MCDC1- 110/	50	55	60	70			R1/2"	175	32	130	M35 x 1,5	205	170	140	84	17	5	35	64	101	17	35
MCDC1- 120/	60	70	80	85			R3/4"	208	42	140	M45 x 1,5	245	205	165	91	21	5	40	73	128	25	45
MCDC1- 125/	60	70	80	85	90		R3/4"	208	42	145	M45 x 1,5	245	205	165	94	21	5	40	73	128	25	45
MCDC1- 130/	70	80	85				R3/4"	208	42	150	M58 x 1,5	245	205	165	96	21	5	40	73	128	25	58
MCDC1- 140/	70	80	85	90	100		R3/4"	265	52	160	M65 x 1,5	280	240	203	101	21	5	45	108	147	35	65
MCDC1- 150/	80	85	90	100			R3/4"	265	52	170	M65 x 1,5	280	240	203	106	21	5	45	108	147	35	65
MCDC1- 160/	85	90	100	110			R1"	320	62	180	M80 x 2	335	275	227	115	30	10	55	140	177	37	80
MCDC1- 180/	90	100	110	125	140		R1"	355	67	210	M100 x 2	360	300	253	130	30	10	60	150	207	42	100
MCDC1- 200/	100	110	125	140			R1"	395	82	230	M110 x 2	420	345	288	139	33	10	70	170	237	47	110

MODEL C2 / BAUFORM C2 / MOUNTING STYLE C2

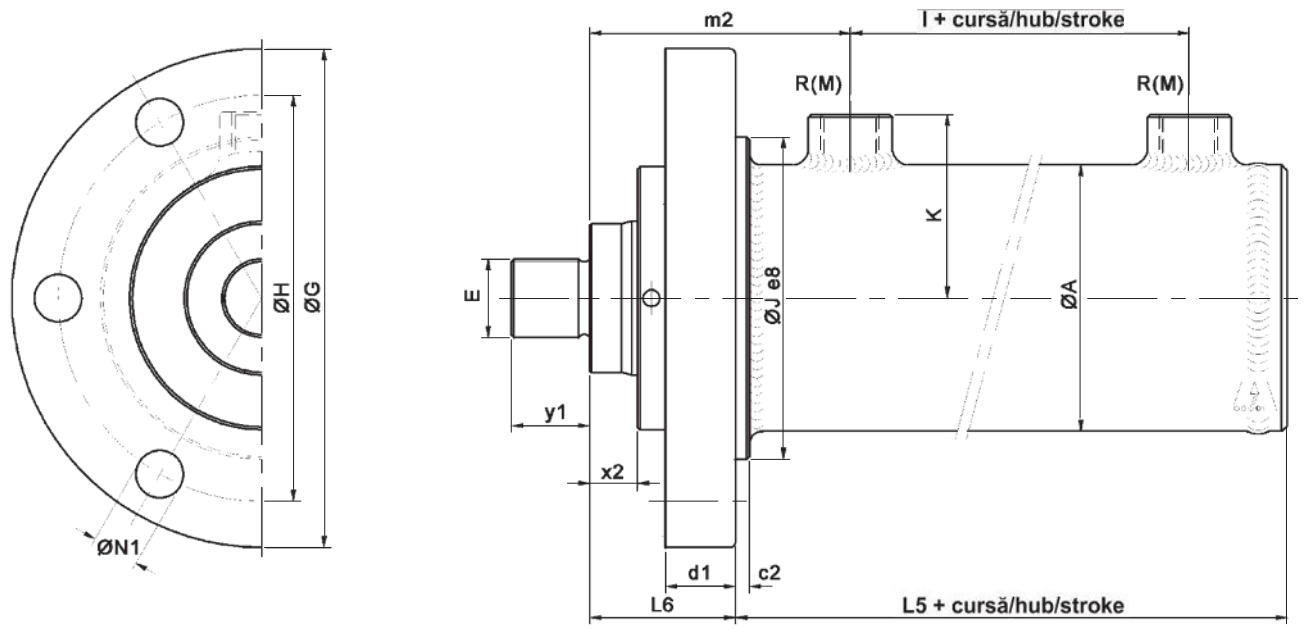

CYLINDER TYPE	R	L5	L6	A	E	G	H	J	K	N1	c2	d1	l	m2	x2	y1
	Dimensions (mm)															
MCDC2- 25/ 12	R1/8"	65	28	35	M10 x 1,5	85	68	50	26	9	4	10	38	40	8	15
MCDC2- 25/ 16	R1/8"	63	33	35	M10 x 1,5	85	68	50	26	9	4	10	25	55	10	15
MCDC2- 30/ 20 22	R1/4"	101	32	40	M14 x 1,5	94	75	60	36	9	6	12	53	60	10	14
MCDC2- 32/ 20 22	R1/4"	101	32	42	M14 x 1,5	94	75	60	37	9	6	12	53	60	10	14
MCDC2- 35/ 20 22 25	R1/4"	101	32	45	M14 x 1,5	94	75	60	39	9	6	12	53	60	10	14
MCDC2- 40/ 20 22 25 28 30	R3/8"	109	37	50	M16 x 1,5	104	85	65	41	11	6	15	48	67	12	16
MCDC2- 50/ 25 30 35	R3/8"	122	43	60	M16 x 1,5	118	95	75	46	11	6	18	57	75	15	16
MCDC2- 60/ 30 35 40	R1/2"	131	48	70	M22 x 1,5	138	115	90	53	13	6	22	61	82	16	22
MCDC2- 63/ 32 35 36 40 45	R1/2"	131	48	75	M22 x 1,5	138	115	90	56	13	6	22	61	82	16	22
MCDC2- 65/ 30 32 35 40 45	R1/2"	131	48	75	M22 x 1,5	138	115	90	56	13	6	22	61	82	16	22
MCDC2- 70/ 35 40 45 50	R1/2"	131	48	80	M22 x 1,5	138	115	90	58	13	6	22	61	82	16	22
MCDC2- 80/ 40 45 50 55 60	R1/2"	147	52	95	M28 x 1,5	178	145	115	66	17	6	25	68	93	17	28
MCDC2- 90/ 45 50 55 60 65	R1/2"	147	52	105	M28 x 1,5	178	145	115	71	17	6	25	68	93	17	28
MCDC2- 100/ 50 55 60 70	R1/2"	145	62	115	M35 x 1,5	205	170	140	76	17	6	35	64	101	17	35
MCDC2- 110/ 50 55 60 70	R1/2"	145	62	130	M35 x 1,5	205	170	140	84	17	6	35	64	101	17	35
MCDC2- 120/ 60 70 80 85	R3/4"	173	77	140	M45 x 1,5	245	205	165	91	21	6	40	73	128	25	45
MCDC2- 125/ 60 70 80 85 90	R3/4"	173	77	145	M45 x 1,5	245	205	165	94	21	6	40	73	128	25	45
MCDC2- 130/ 70 80 85	R3/4"	173	77	150	M58 x 1,5	245	205	165	96	21	6	40	73	128	25	58
MCDC2- 140/ 70 80 85 90 100	R3/4"	225	92	160	M65 x 1,5	280	240	203	101	21	6	45	108	147	35	65
MCDC2- 150/ 80 85 90 100	R3/4"	225	92	170	M65 x 1,5	280	240	203	106	21	6	45	108	147	35	65
MCDC2- 160/ 85 90 100 110	R1"	275	107	180	M80 x 2	335	275	227	115	30	11	55	140	177	37	80
MCDC2- 180/ 90 100 110 125 140	R1"	305	117	210	M100 x 2	360	300	253	130	30	11	60	150	207	42	100
MCDC2- 200/ 100 110 125 140	R1"	335	142	230	M110 x 2	420	345	288	139	33	11	70	170	237	47	110

HFR2S

CILINDRO DOPPIO EFFETTO
DOUBLE ACTING CYLINDER
DOPPELWIRKENDE ZYLINDER

M250

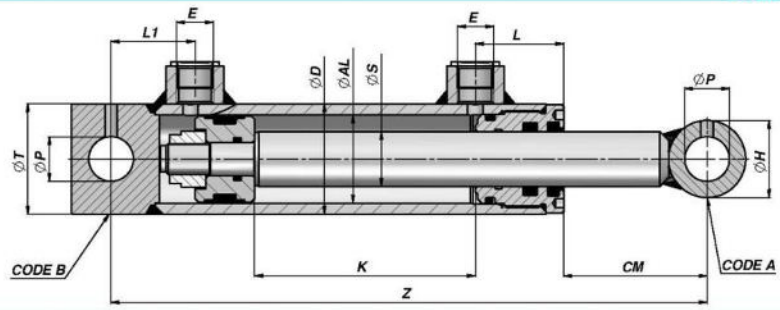

Codice Code Bestell-Nr.	K	Z	kg	E BSP	L	L1	CM	ØP	ØH	V	ØT	Code A	Code B	Codice Code Bestell-Nr.	K	Z	kg
ØD 35 ØAL 25 ØS 16																	
HFR0160050	**50**	160	1,00														
HFR0160100	**100**	210	1,20														
HFR0160150	**150**	260	1,40	1/4"	33	22	31	12,1	25	25	35	CBF0012025025	CFHR035025				
HFR0160200	**200**	310	1,70														
ØD 42 ØAL 32 ØS 20																	
HFR0200050	**50**	205	1,70														
HFR0200100	**100**	255	2,10														
HFR0200150	**150**	305	2,40														
HFR0200200	**200**	355	2,80	1/4"	33	35	51	16,2	30	35	40	CBF0016030035	CFHR040032				
HFR0200250	**250**	405	3,10														
HFR0200300	**300**	455	3,50														
HFR0200400	**400**	555	4,20														
HFR0200500	**500**	655	4,80														
ØD 50 ØAL 40 ØS 25																	
HFR2S0400250100	**100**	270	3,00														
HFR2S0400250150	**150**	320	3,40														
HFR2S0400250200	**200**	370	3,90														
HFR2S0400250250	**250**	420	4,40														
HFR2S0400250300	**300**	470	4,80	3/8"	40	38	65	20,25	35	40	50	CBF1020035040	CFHR040020040				
HFR2S0400250400	**400**	570	5,80														
HFR2S0400250500	**500**	670	6,70														
HFR2S0400250600	**600**	770	7,60														
HFR2S0400250700	**700**	870	8,60														
HFR2S0400250800	**800**	970	9,50														
ØD 60 ØAL 50 ØS 30																	
HFR2S0500300100	**100**	300	4,40														
HFR2S0500300150	**150**	350	5,00														
HFR2S0500300200	**200**	400	5,60														
HFR2S0500300250	**250**	450	6,20														
HFR2S0500300300	**300**	500	6,90														
HFR2S0500300400	**400**	600	8,10	3/8"	43	42	85	25,25	40	45	60	CBF1025040045	CFHR050025049				
HFR2S0500300500	**500**	700	9,30														
HFR2S0500300600	**600**	800	10,50														
HFR2S0500300700	**700**	900	11,80														
HFR2S0500300800	**800**	1000	13,00														
HFR2S0500300900	**900**	1100	14,20														
HFR2S0500301000	**1000**	1200	15,50														

HM0

CILINDRO DOPPIO EFFETTO
DOUBLE ACTING CYLINDER
DOPPELWIRKENDE ZYLINDER

M250

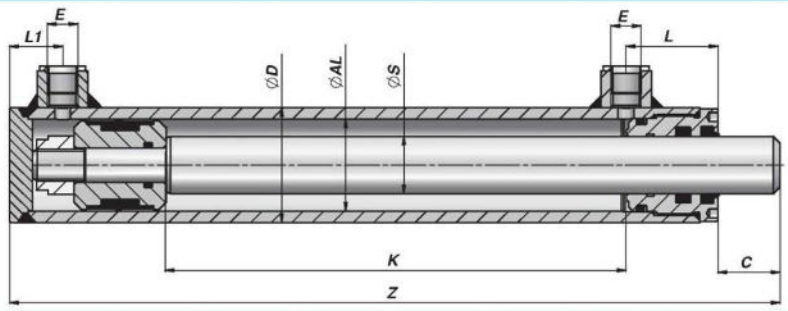

Codice Code Bestell-Nr.	K	Z	kg	E BSP	L	L1	C	Codice Code Bestell-Nr.	K	Z	kg
ØD 35	**ØAL 25**	**ØS 16**									
HM0025160050	**50**	135	0,70								
HM0025160100	**100**	185	0,95	1/4"	33	15	17				
HM0025160150	**150**	235	1,25								
HM0025160200	**200**	285	1,50								
ØD 42	**ØAL 32**	**ØS 20**									
HM0032200050	**50**	155	1,30								
HM0032200100	**100**	205	1,60								
HM0032200150	**150**	255	1,95								
HM0032200200	**200**	305	2,30	1/4"	33	20	16				
HM0032200250	**250**	355	2,70								
HM0032200300	**300**	405	3,00								
HM0032200400	**400**	505	3,70								
HM0032200500	**500**	605	4,40								
ØD 50	**ØAL 40**	**ØS 20**						**ØD 50**	**ØAL 40**	**ØS 25**	
HM01200100	**100**	230	2,27					HM01250100	**100**	230	2,50
HM01200150	**150**	280	2,67					HM01250150	**150**	280	2,95
HM01200200	**200**	330	3,05					HM01250200	**200**	330	3,39
HM01200250	**250**	380	3,45					HM01250250	**250**	380	3,85
HM01200300	**300**	430	3,85					HM01250300	**300**	430	4,32
HM01200350	**350**	480	4,27	1/4"	40	23	22	HM01250350	**350**	480	4,79
HM01200400	**400**	530	4,65					HM01250400	**400**	530	5,26
HM01200450	**450**	580	5,08					HM01250450	**450**	580	5,72
HM01200500	**500**	630	5,49					HM01250500	**500**	630	6,20
								HM01250550	**550**	680	6,60
								HM01250600	**600**	730	7,13
ØD 60	**ØAL 50**	**ØS 25**						**ØD 60**	**ØAL 50**	**ØS 30**	
HM02250100	**100**	240	3,29								
HM02250150	**150**	290	3,83					HM02300150	**150**	290	4,11
HM02250200	**200**	340	4,34					HM02300200	**200**	340	4,74
HM02250250	**250**	390	4,85					HM02300250	**250**	390	5,35
HM02250300	**300**	440	5,35					HM02300300	**300**	440	5,97
HM02250350	**350**	490	5,94					HM02300350	**350**	490	6,55
HM02250400	**400**	540	6,40	3/8"	43	26	22	HM02300400	**400**	540	7,20
HM02250450	**450**	590	7,30					HM02300450	**450**	590	7,80
HM02250500	**500**	640	7,43					HM02300500	**500**	640	8,42
HM02250550	**550**	690	8,06					HM02300550	**550**	690	9,04
HM02250600	**600**	740	8,46					HM02300600	**600**	740	9,64
								HM02300700	**700**	840	10,85
HM02250800	**800**	940	10,71					HM02300800	**800**	940	12,10
HM02251000	**1000**	1140	12,87					HM02301000	**1000**	1140	14,57
ØD 70	**ØAL 60**	**ØS 30**						**ØD 70**	**ØAL 60**	**ØS 35**	
HM03300100	**100**	260	4,82					HM03350100	**100**	260	5,07
HM03300150	**150**	310	5,55					HM03350150	**150**	310	5,85
HM03300200	**200**	360	6,20					HM03350200	**200**	360	6,60
HM03300250	**250**	410	6,87					HM03350250	**250**	410	7,40
HM03300300	**300**	460	7,55					HM03350300	**300**	460	8,15
HM03300350	**350**	510	8,20					HM03350350	**350**	510	8,94
HM03300400	**400**	560	8,90	3/8"	50	30	23	HM03350400	**400**	560	9,72
HM03300450	**450**	610	9,53					HM03350450	**450**	610	10,47
HM03300500	**500**	660	10,25					HM03350500	**500**	660	11,25
HM03300550	**550**	710	10,86					HM03350550	**550**	710	12,00
HM03300600	**600**	760	11,60					HM03350600	**600**	760	12,81
HM03300800	**800**	960	14,26					HM03350800	**800**	960	15,87
HM03301000	**1000**	1160	17,00					HM03351000	**1000**	1160	18,93

CILINDRO DOPPIO EFFETTO
DOUBLE ACTING CYLINDER
DOPPELWIRKENDE ZYLINDER

HM0

M250

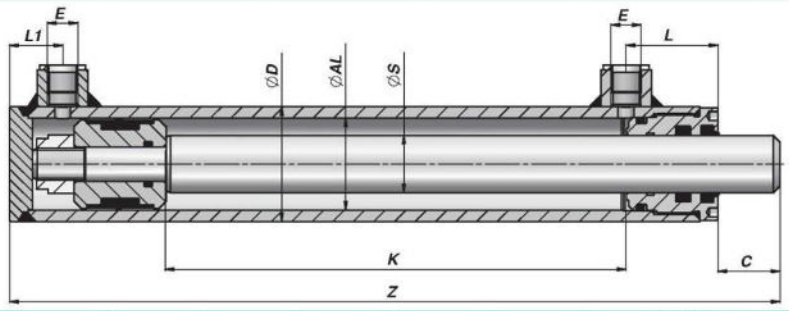

Codice Code Bestell-Nr.	K	Z	kg	E BSP	L	L1	C	Codice Code Bestell-Nr.	K	Z	kg
ØD 70	**ØAL 60**	**ØS 40**						**ØD 73**	**ØAL 63**	**ØS 40**	
HM03400200	**200**	360	7,25					HM0063400200	**200**	360	7,60
HM03400250	**250**	410	8,14					HM0063400250	**250**	410	8,50
HM03400300	**300**	460	9,03					HM0063400300	**300**	460	9,40
HM03400350	**350**	510	9,90					HM0063400350	**350**	510	10,30
HM03400400	**400**	560	10,79					HM0063400400	**400**	560	11,20
HM03400450	**450**	610	11,64	3/8"	50	30	23	HM0063400450	**450**	610	12,10
HM03400500	**500**	660	12,52					HM0063400500	**500**	660	13,00
HM03400550	**550**	710	13,45					HM0063400550	**550**	710	13,90
HM03400600	**600**	760	14,30					HM0063400600	**600**	760	14,80
HM03400800	**800**	960	17,82					HM0063400800	**800**	960	18,50
HM03401000	**1000**	1160	21,40					HM0063401000	**1000**	1160	22,10
ØD 80	**ØAL 70**	**ØS 35**						**ØD 80**	**ØAL 70**	**ØS 40**	
HM04350100	**100**	260	6,09								
HM04350150	**150**	310	6,95								
HM04350200	**200**	360	7,74					HM04400200	**200**	360	8,28
HM04350250	**250**	410	8,60					HM04400250	**250**	410	9,26
HM04350300	**300**	460	9,40					HM04400300	**300**	460	10,24
HM04350350	**350**	510	10,26					HM04400350	**350**	510	11,20
HM04350400	**400**	560	11,00	3/8"	50	33	23	HM04400400	**400**	560	12,80
HM04350450	**450**	610	11,88					HM04400450	**450**	610	13,11
HM04350500	**500**	660	12,60					HM04400500	**500**	660	14,01
HM04350550	**550**	710	13,66					HM04400550	**550**	710	15,10
HM04350600	**600**	760	14,20					HM04400600	**600**	760	15,99
HM04350800	**800**	960	17,56					HM04400800	**800**	960	19,73
HM04351000	**1000**	1160	21,26					HM04401000	**1000**	1160	23,51
ØD 92	**ØAL 80**	**ØS 40**						**ØD 92**	**ØAL 80**	**ØS 50**	
HM05400200	**200**	380	11,08					HM05500200	**200**	380	12,35
HM05400250	**250**	430	12,22					HM05500250	**250**	430	13,73
HM05400300	**300**	480	13,35					HM05500300	**300**	480	15,15
HM05400400	**400**	580	15,56	1/2"	60	35	25	HM05500400	**400**	580	17,95
HM05400500	**500**	680	17,77					HM05500500	**500**	680	20,71
HM05400600	**600**	780	19,98					HM05500600	**600**	780	24,00
HM05400800	**800**	980	24,50					HM05500800	**800**	980	29,50
HM05401000	**1000**	1180	28,92					HM05501000	**1000**	1180	35,00
ØD 105	**ØAL 90**	**ØS 50**									
NEW! HM0090500300	**300**	486	19,30								
NEW! HM0090500400	**400**	586	22,64								
NEW! HM0090500500	**500**	686	25,97	1/2"	60	40	23				
NEW! HM0090500600	**600**	786	29,30								
NEW! HM0090500800	**800**	986	35,97								
NEW! HM0090501000	**1000**	1186	42,64								
ØD 115	**ØAL 100**	**ØS 50**						**ØD 115**	**ØAL 100**	**ØS 60**	
HM06500200	**200**	410	19,50								
HM06500250	**250**	460	21,50								
HM06500300	**300**	510	23,00					HM06600300	**300**	510	25,50
HM06500400	**400**	610	26,50	1/2"	82	38	25	HM06600400	**400**	610	29,50
HM06500500	**500**	710	30,00					HM06600500	**500**	710	33,50
HM06500600	**600**	810	33,50					HM06600600	**600**	810	37,50
HM06500800	**800**	1010	40,50					HM06600800	**800**	1010	46,00
HM06501000	**1000**	1210	47,50					HM06601000	**1000**	1210	54,50

MATERIALE - MATERIAL:
TUBO - TUBE - ROHR: ACCIAIO - STEEL - STAHL St 52.3 DIN 2393 ISO H9
STELO - ROD - KOLBENSTANGE:
ACCIAIO - STEEL - STAHL UNI C45 SAE 1045 - CROMO - CHROME - CHROM: 25 MICRON ±5 Rating 9/120 h ISO 10289 - 1999/ISO 9227-NSS